PROTECTION CLASS (IP RATING)

IP67 is

●IEC60529 standard is a system for classifying the degrees of protection provided by the enclosures of electrical equipment, such as against dust and water.

IP □ □

First digit : Solid particle protection

No.	Protection against ingress of solid foreign objects	Protection against access to hazardous parts
0	No Protection	No Protection
1	Ø50mm Protected against solid objects over 50mm.	50 Protected against accidental touch by a large surface of the body, such as by hands. (Tested with a 50mm diameter steel ball.)
2	Ø12.5mm Protected against solid objects over 12.5mm.	12 Protected against accidental touch by fingers or similar objects (Tested with a 12mm diameter, 80mm long articulated finger)
3	Ø2.5mm Protected against solid objects over 2.5mm.	2.5 Protected against accidental touch by tools or thick wires. (Tested with a 2.5mm diameter, 100mm long bar)
4	Ø1mm Protected against solid objects over 1.0mm.	1.0 Protected against accidental touch by most wires and screws. (Tested with a 1.0mm diameter, 100mm long wire)
5	Protected against dust; limited ingress, no harmful deposits.	
6	Complete protection against dust.	
69K	90° 60° 30° 0° 80 to 100 barrel steam jets at 80℃ (±5℃) from a 0°, 30°, 60°, and 90° angle, at a distance of 100 ~ 150mm for 30 sec x 5 sets	

Second digit: Liquid ingress protection

No.	Protection against ingress of liquid
0	No Protection
1	Dripping water (vertically falling drops) for 10 minutes.
2	15° Vertically dripping water when tilted at 15° for 10 minutes (2.5 minutes per position).
3	60° 60° Spraying water (at any angle) of 0.07ℓ/min up to 60° from the vertical for 10 minutes.
4	Spraying water of 0.07ℓ/min from all directions for 10 minutes.
5	Jets of water projected by a φ6.3 nozzle of 12.5ℓ / min from all directions at 1 min / 1㎡ for at least 3 minutes.
6	Powerful jets of water projected by a φ12.3 nozzle of 100ℓ / min from all directions at 1 min / 1㎡ for at least 3 minutes.
7	1M Immersion, up to 1 meter depth (for 30 mins).
8	Immersion (test depth and duration beyond IPX7 requirements)

A point of note for Waterproof Boxes

- ●For outdoor use, direct sunlight will accelerate the degradation of the box. For more information, please see page Outdoor Use - 1.
- ●For customers planning to attach their own original mounting brackets onto the waterproof boxes, it is recommended to mill larger holes with enough clearance to attach the bracket. If the milled hole and clearance is too small, it may cause irreparable damage to the box.
- ●Waterproof boxes made of Polycarbonate or ABS plastic material may be damaged if certain types of washing chemicals, solvents, oils, or thread locking adhesives are present on the box. Furthermore, paint not suitable to be used on plastic materials may also cause damage.

IP68
HIGH PERFORMANCE

Outdoor Waterproof Box for 5G Technology!

WG series

IP68 High performance at 24-hours/1m-depth immersion

*Do not use underwater/underground.

With a silicone waterproof gasket, and supported by multiple enclosing screws from the rear side, it allows the enclosure to maintain a stable high waterproofing capability.

Weather-resistant ASA material

ASA material is resistant to deterioration and discoloration due to ultraviolet rays. Perfect for outdoor communication or network devices.

Captive screws for easy maintenance

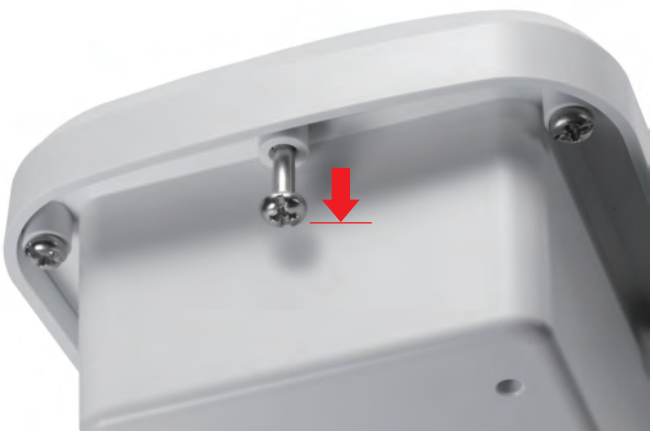

There is no risk of screws dropping out and lost during maintenance. Captive screw is able to lock into a pre-drilled hole to provide a secure hold.

Easy installation on walls & poles

By using the optional mounting accessories, it can be installed on walls and poles with ease.

Optional terminal blocks compatible

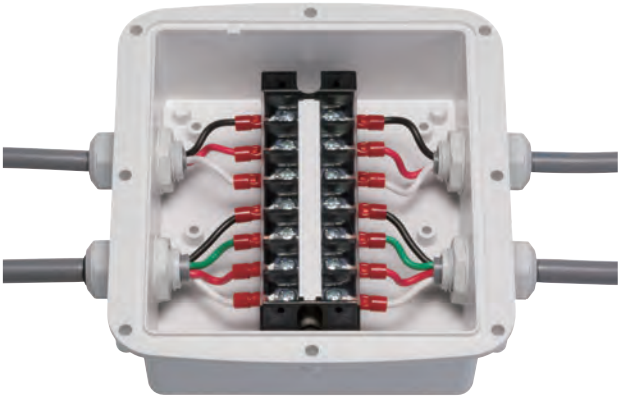

Optional terminal blocks, WTB series can be installed onto the existing bosses inside the WG series box without additional processing or customization, hence can also function as a terminal junction box. (See page 8 for WTB terminal blocks.)

WGV series - Pressure equalization models with ventilation plug

Ventilation plug protects the enclosure from deformation by equalizing pressure in environments where there are differences between strong daytime and low nighttime temperatures, as well as venting the gas generated within.
See page 5 ~ 6 for WGV series equipped with built-in ventilation plug.

Ventilation plugs are also available separately.
See page 325 ~ 326 for ventilation plugs.

WG series IP68 HIGH PERFORMANCE WATERPROOF BOX

NEW

- IP68 high performance plastic box protected from immersion as long as 24 hours at 1m depth.
- ASA material is resistant to deterioration and discoloration from ultraviolet rays.
  Perfect for use as outdoor communication or network devices.
- Self-tapping captive screws which are able to lock into a pre-drilled hole and provide a secure hold for fastening the cover. Please drive the self-tapping captive screws for cutting a thread into the holes at first so that securing the cover and body together properly.

IP68

Technical Data

Protection class :
IP68 (24-hours/1m-depth)
Operating temperature :
-30°C ~ +60°C
Recommended torque :
0.5 ~ 0.6N • m

*May become brittle and break under impact when temperature is lowered close to -30°C.

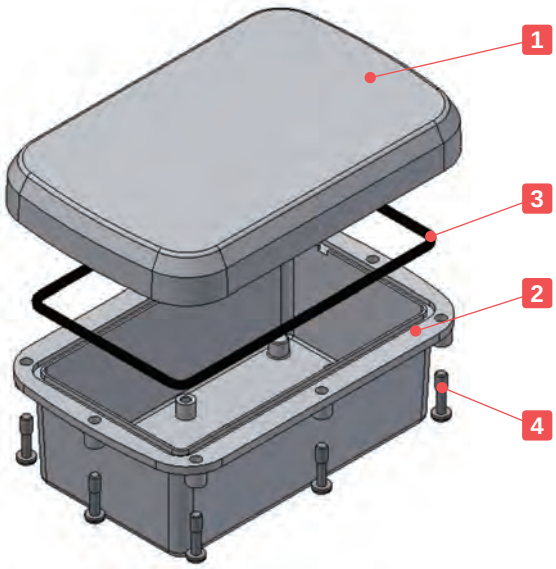

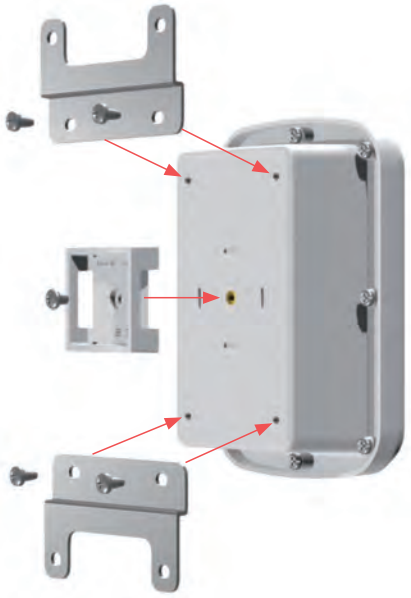

There are 5 holes on the backside of the body (4 at each corner, 1 in center). 4 corner holes are for wall mounting bracket, and 1 center hole is for pole mounting bracket.

Components

No.	Part name	Pcs	Material / Color
1	Cover	1	ASA UL94HB / Off-white
2	Body	1	ASA UL94HB / Off-white
3	Gasket	1	Silicone / Black
4	Self-tapping captive screw	8 ~ 10	Stainless steel / Unfinished

WG dimensions

■ DXF/DWG/PDF/STP drawings available on our website.

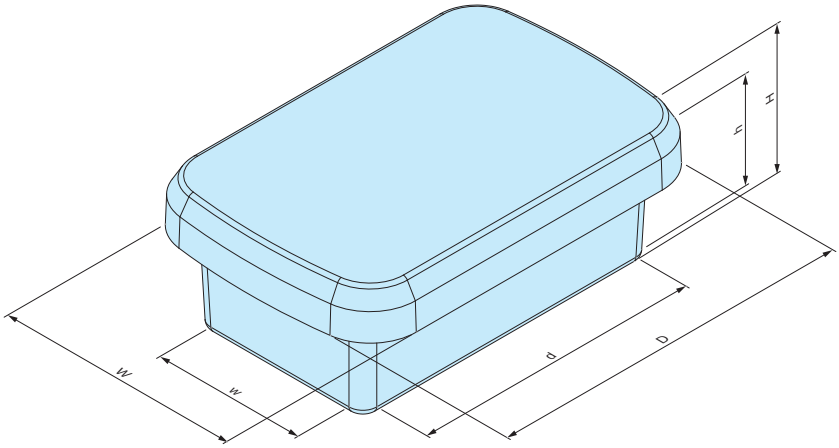

Product no. / Dimensions

Product no.	External dimensions			Internal dimensions			Screw	Weight (g)
	W	D	H	w	d	h		
WG10-15-6W	100	150	55	63	115	43	M4 × 8 pcs	169.5
WG10-15-8W	100	150	75	62	114	63	M4 × 8 pcs	192
WG15-16-6W	145	155	55	107	120	43	M4 × 8 pcs	232
WG15-16-8W	145	155	80	105	118	68	M4 × 8 pcs	266.5
WG15-21-6W	145	210	60	107	174	48	M4 × 10 pcs	314
WG15-21-9W	145	210	90	105	172	78	M4 × 10 pcs	367

Accessories (Optional parts)

Wall mounting bracket WGF series
See page 9

Pole mount bracket WGMB • WPMB series
See page 9 ~ 10

Pole mounting belt SNB • PKB series
See page 323 ~ 324

PCB mounting screw MT4-8T
See page 7

Tapping standoff TPS series
See page 122

Protective vent PMF series
See page 325 ~ 326

Cable gland
See page 333 ~ 340

Mounting plate WGP series
See page 7

DIN rail FDR series
See website

Terminal block WTB series
See page 8

WGV series IP68 PLASTIC ENCLOSURE with VENTILATION PLUG

NEW

- IP68 high performance plastic box protected from immersion as long as 24 hours at 1m depth where external (surroundings) and internal (inside box) pressure are different.
- ASA material is resistant to deterioration and discoloration from ultraviolet rays. Perfect for use as outdoor communication or network devices.
- Self-tapping captive screws which are able to lock into a pre-drilled hole and provide a secure hold for fastening the cover. Please drive the self-tapping captive screws for cutting a thread into the holes at first so that securing the cover and body together properly.

IP68

Technical Data

Protection class :
IP68 (24-hours/1m-depth)
Operating temperature :
-30°C ~ +60°C
Recommended torque :
0.5 ~ 0.6N • m
Ventilation plug recommended torque :
0.6 ~ 0.8N • m

*May become brittle and break under impact when temperature is lowered close to -30°C.

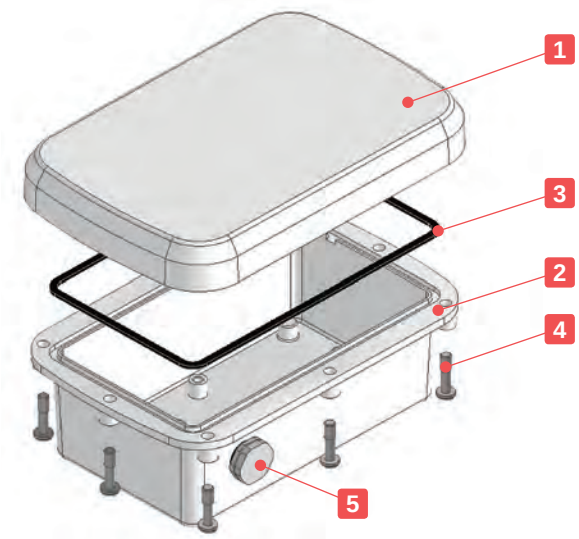

Ventilation plug protects the enclosure from deformation by equalizing pressure in environments where there are differences between strong daytime and low nighttime temperatures, as well as venting the gas generated within.

Components

No.	Part name	Pcs	Material / Color
1	Cover	1	ASA UL94HB / Off-white
2	Body	1	ASA UL94HB / Off-white
3	Gasket	1	Silicone / Black
4	Self-tapping captive screw	8 ~ 10	Stainless steel / Unfinished
5	Ventilation plug	1	PA66 + PA6 • PTFE / Light gray

WGV dimensions

■ DXF/DWG/PDF/STP drawings available on our website.

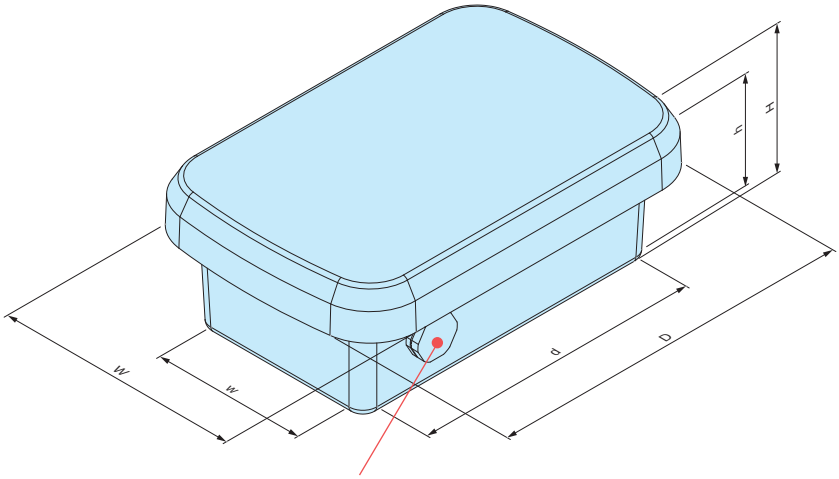

The location of the ventilation plug is pre-fixed.
*Customization for location change possible.

Product no. / Dimensions

Product no.	External dimensions			Internal dimensions			Screw	Weight (g)
	W	D	H	w	d	h		
WGV10-15-6W	100	150	55	58	115	43	M4 × 8 pcs	171
WGV10-15-8W	100	150	75	57	114	63	M4 × 8 pcs	193.5
WGV15-16-6W	145	155	55	102	120	43	M4 × 8 pcs	233.5
WGV15-16-8W	145	155	80	100	118	68	M4 × 8 pcs	268
WGV15-21-6W	145	210	60	102	174	48	M4 × 10 pcs	315.5
WGV15-21-9W	145	210	90	100	172	78	M4 × 10 pcs	368.5

Accessories (Optional parts)

Wall mounting bracket WGF series
See page 9

Pole mount bracket WGMB • WPMB series
See page 9 ~ 10

Pole mounting belt SNB • PKB series
See page 323 ~ 324

PCB mounting screw MT4-8T
See page 7

Tapping standoff TPS series
See page 122

Cable gland
See page 333 ~ 340

Terminal block WTB series
See page 8

Mounting plate WGP series
See page 7

DIN rail FDR series
See website

WGP series MOUNTING PLATE for WG • WGV

NEW

WGP dimensions

■ DXF/DWG/PDF/STP drawings available on our website.

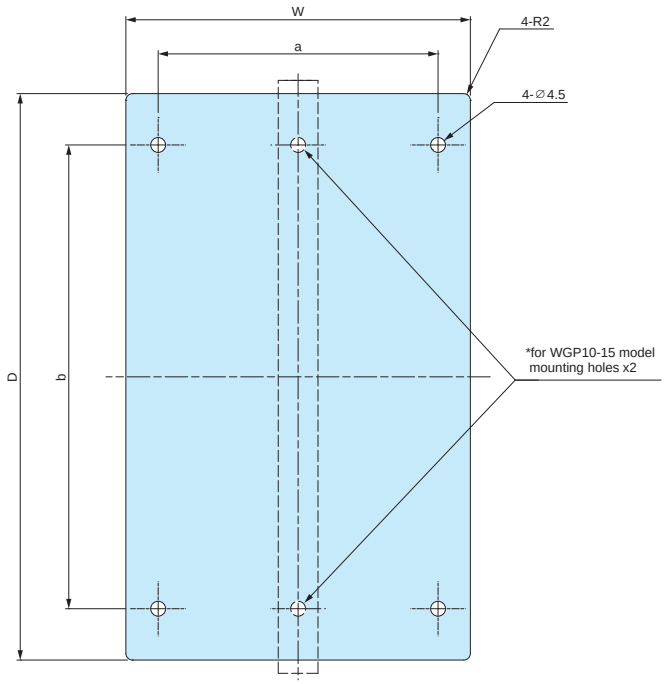

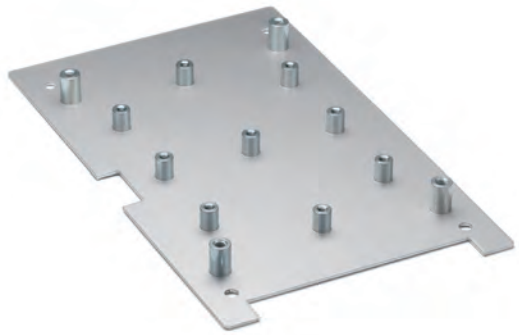

■ Hole milling, clinching spacer customizations are available.
See page Custom-7 ~ Custom-10 and our website for more details.

■ Material / Finish : A1100P (t=1.5mm) / Silver anodized

Product no. / Dimensions

■ Mounting screws included.

Product no.	W	D	a	b	Suitable models	Weight (g)
WGP10-15	60	112	–	97	WG • WGV10-15-6, WG • WGV10-15-8	30
WGP15-16	105	117	84.5	90	WG • WGV15-16-6, WG • WGV15-16-8	54
WGP15-21	104	171	84.5	140	WG • WGV15-21-6, WG • WGV15-21-9	76

MT4-8T PCB MOUNTING SCREW

■ Self-tapping screws for board mounting on bosses inside WG and WGV series enclosures.

Product no. / Dimensions

Product no.	Material	Finish	Pack of
MT4-8T (Bind tapping M4-8)	Steel	Trivalent chromate	20

WTB series TERMINAL BLOCK for WG • WGV

NEW

(FW2)

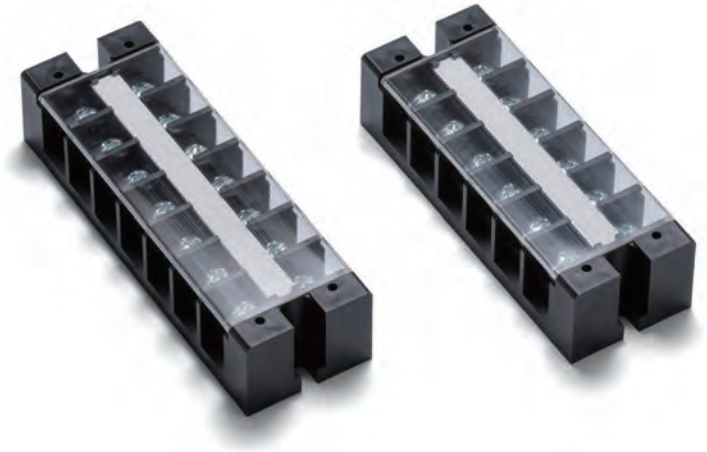

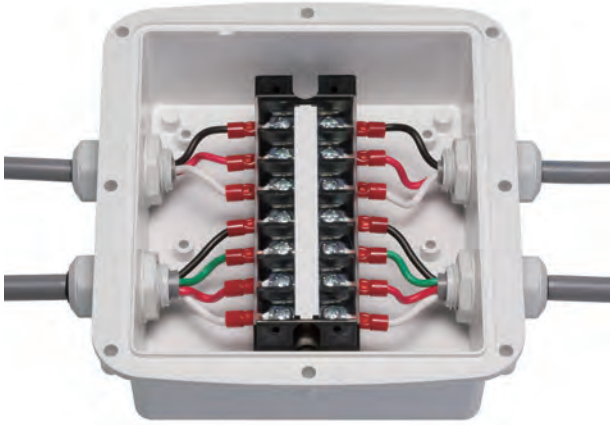

■ Compatible terminal blocks for WG • WGV series.

Components

No.	Part name	Pcs	Material	Color or Finish
1	Base	1	PBT UL94V-0	Black
2	Conductive plate	1	Brass	Nickel plated
3	Terminal screw (M4-10)	2 x P	Steel	Trivalent chromate
4	Symbol board	1	PET	White
5	Cover	1	Polycarbonate UL94V-0	Transparent
—	Screw (Bind tapping M4-10)	2	Steel	Trivalent chromate

Specification

1. Electrical Rating 600V • 35A
2. Insulation Resistance DC500V 1000MΩ ~
3. Withstand Voltage AC2500V (Tested for 1 min.)
4. Rising Temp. 30°C or less
5. Operating Temp. Range -40°C ~ +90°C
6. Storage Temp. Range -40°C ~ +90°C

WTB dimensions

■ DXF/DWG/PDF drawings available on our website.

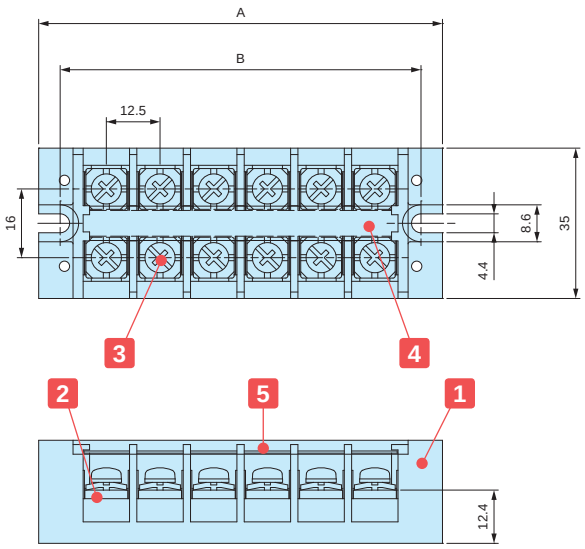

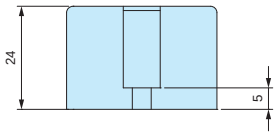

Product no. / Dimensions

Product no.	P (Number of poles)	A	B	Suitable models
WTB-240- 3P-FB	3	56.5	46.5	WG • WGV10-15-□ (W direction)
WTB-240- 6P-FB	6	94.0	84.0	WG • WGV15-16-□, WG • WGV15-21-□ (W direction)
WTB-240- 7P-FB	7	106.5	96.5	WG • WGV10-15-□, WG • WGV15-16-□ (D direction)
WTB-240-10P-FB	10	144.0	134.0	WG • WGV15-21-□ (D direction)

WGF series WALL MOUNTING BRACKET for WG • WGV

NEW

WGF dimensions

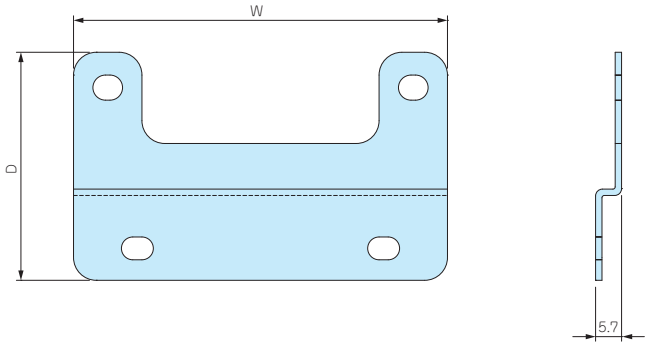

■ DXF/DWG/PDF/STP drawings available on our website.

Product no. / Dimensions

■ Stainless steel mounting screws included.

Product no.	W	D	Suitable models	Material / Finish	Pack of
WGF-10	82	50	WG • WGV10-15-□ (W direction)	Stainless steel t=1.5mm / Barrel finish	2
WGF-15	132	50	WG • WGV10-15-□ (D direction) WG • WGV15-21-□ (W direction) WG • WGV15-16-□ (W • D direction)		2

WGMB series POLE MOUNTING BRACKET for WG • WGV

NEW

WGMB dimensions

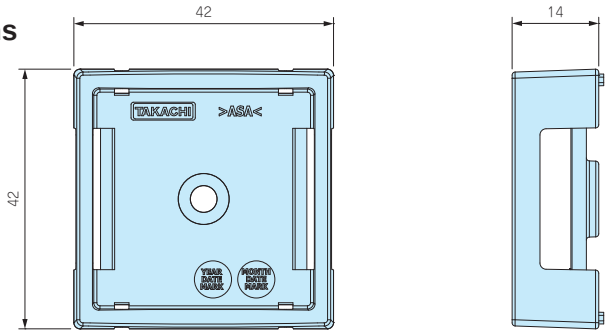

■ Pole mount bracket made from weather resistant ASA material.

■ Hole milling is not required when installing the mount bracket, thus allowing the enclosure to maintain its IP rating.

■ WG • WGV10-15-□ and 15-16-□ can be installed in both the W or D direction.

■ Pole mount is possible with the use of SNB or PKB series mounting belt. (See page 323 ~ 324)

■ DXF/DWG/PDF/STP drawings available on our website.

Product no. / Dimensions

Product no.	Suitable models	Material / Color	Weight (g)	Pack of
WGMB-1W	WG • WGV10-15-□ WG • WGV15-16-□- (1 pc required) WG • WGV15-21-□- (2 pcs required)	ASA UL94-HB / Off-white	9	1

Installation example

Installation (1 pc)

Installation (2 pcs)

WPMB-M4-2 POLE MOUNTING BRACKET

WPMB-M4-2 dimensions

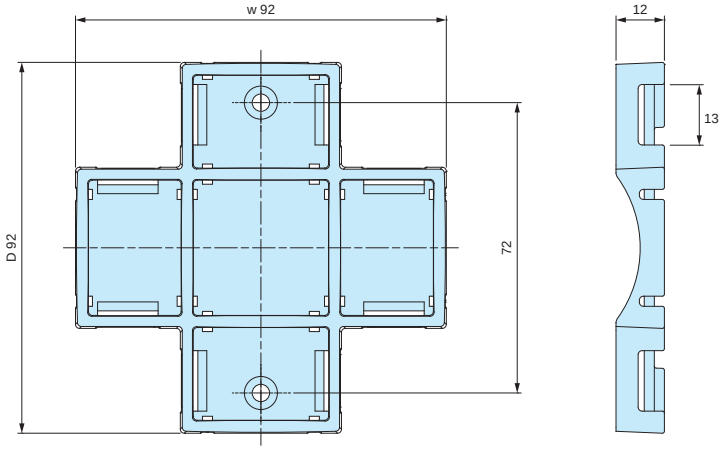

■ DXF/DWG/PDF/STP drawings available on our website.

■ Pole mount bracket made from weather resistant ASA material.

■ Pole mounting belt can be installed either W or D direction.

■ Pole mount is possible with the use of PKB series mounting belt. (See page 324)

■ Hole milling is not required when installing the mount bracket, thus allowing the enclosure to maintain its protection class.

*Stainless steel screw belt SNB series is not usable on WPMB-M4-2 series.

Color
White gray

Product no. / Dimensions

Product no.	Suitable models	Recommended torque (N • m)	Weight (g)	Pack of
WPMB-M4-2G	WG • WGV15-21-6, WG • WGV15-21-9	0.45 ~ 0.5	24	1

■ Recommended torque listed is for reference only; actual may differ. Assemble after testing torque.

Installation example

Vertical mounting

Horizontal mounting

ECONOMICAL OUTDOOR NETWORK BOX

Unique construction rainproof box

OB series

REASONS for ECONOMICAL

1. No Gasket required by the unique construction

2. Wall/Pole bracket integrated

Unique seamless construction

No rain entry by the seamless construction without gasket nor joint.

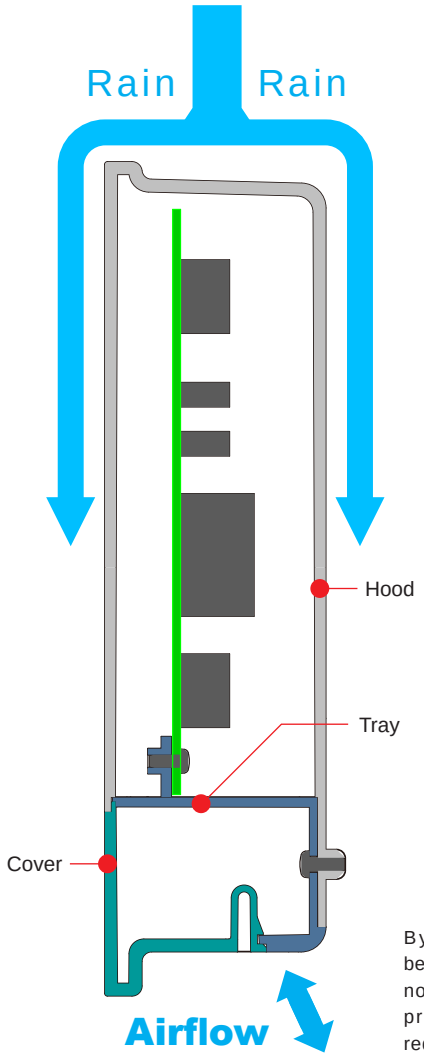

By having a slight gap between the cover and tray, no ventilation plug for the pressure equalization is required.

Wall • Pole mounting bracket integrated

The slit of the integrated bracket in the backside can hold the pole mounting belts. And the hanging holes can be utilize for wall mounting.

Weather-resistant ASA material

ASA material is resistant to deterioration and discoloration from ultraviolet rays. Perfect for use as outdoor communication or network devices.

How to install PCB • Mounting plate

1) Fix PCB or mounting plate on the tray with screws.

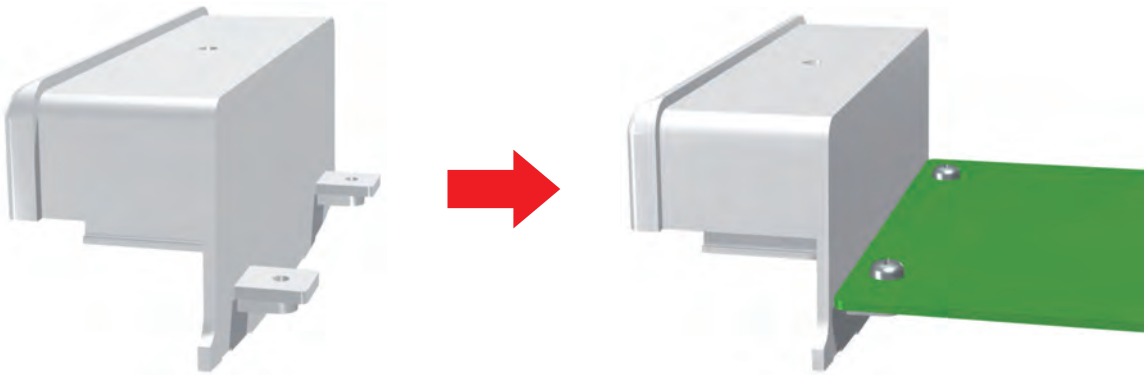

2) Push PCB or mounting plate fixed on the tray all the way along the grooves on inside of the hood into.

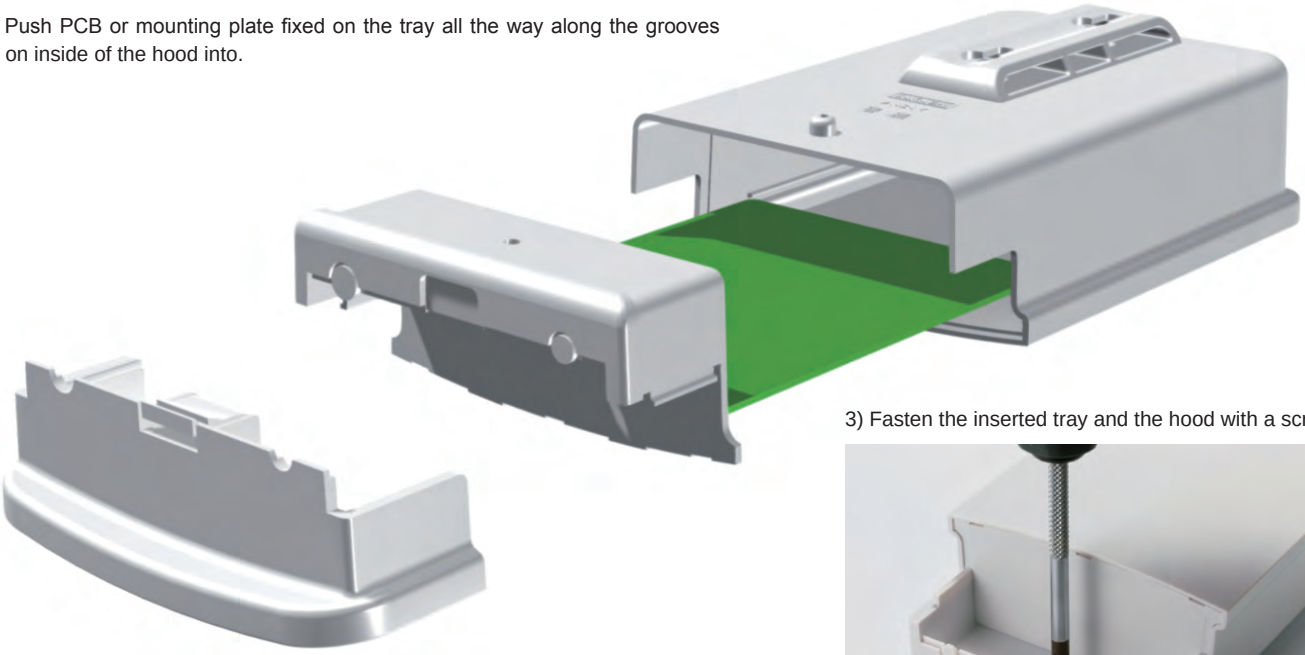

3) Fasten the inserted tray and the hood with a screw.

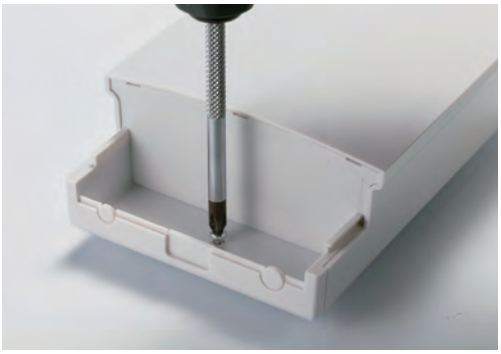

Easy knock-out hole punching & cover replacement

Tray comes with knock-out holes for wiring. Knock-out holes can easily be punched out through with a plier or a nipper.
The cover can be easily removed with one touch, hence it is a excellent structure for performing maintenance.
For wiring, please machine cutout/hole on the side-wall of the tray as shown in the installation example below.

Connecter installation example

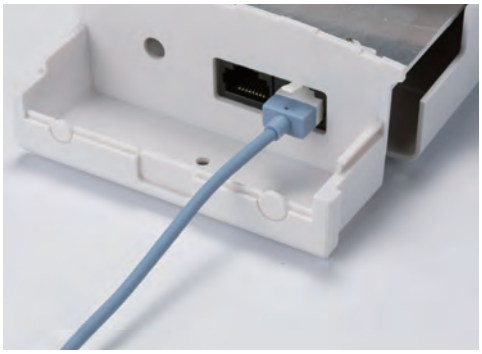

OB series ECONOMICAL OUTDOOR NETWORK BOX

NEW

- Unique seamless construction and rainproof outdoor network box.
  Although it is IP44, it can completely protect the internal components against rain when installed vertically.
- ASA material is resistant to deterioration and discoloration from ultraviolet rays.
  Perfect for use as outdoor communication devices.
- Bracket integrated in the backside equipped with the slits allows for pole mounting belt to be passed through the slit for pole mounting, while the hanging holes enable it to be secured onto wall hooks or brackets.
- Tray comes with knock-out holes for wiring. Knock-out holes can easily be punched out through with a plier or a nipper.

IP44

Technical Data
Protection class : IP44 Operating temperature : -30°C ~ +60°C

*May become brittle and break under impact when temperature is lowered close to -30°C.

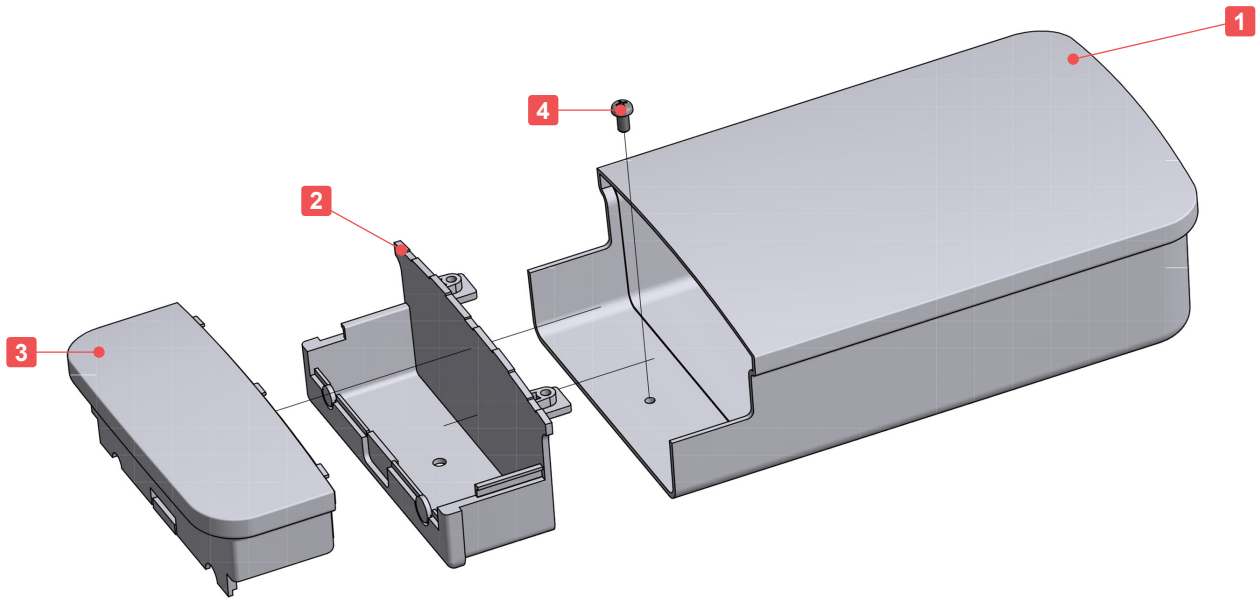

Components

No.	Part name	Pcs	Material / Color
1	Hood	1	ASA UL94HB / Off-white
2	Tray	1	ASA UL94HB / Off-white
3	Cover	1	ASA UL94HB / Off-white
4	Screw (Tray/PCB installation)	3	Stainless steel / Unfinished

OB dimensions

■ DXF/DWG/PDF/STP drawings available on our website.

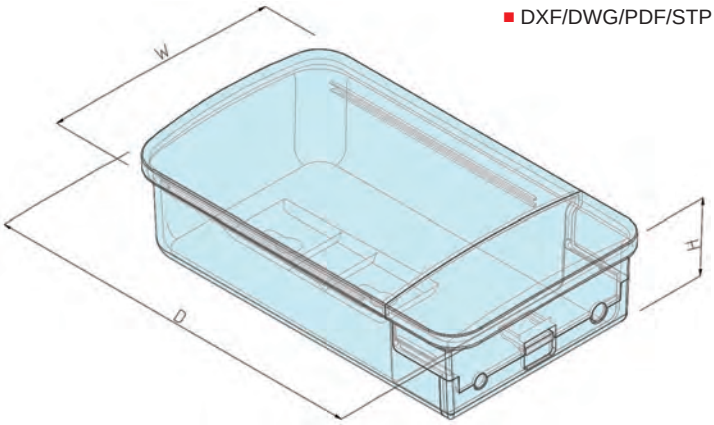

Product no. / Dimensions

Product no.	External dimensions			Knock-out holes
	W	D	H	
OB 8-14-4W	75	140	35	5.6Φ x1 • 7.2Φ x1
OB10-17-5W	100	170	45	5.6Φ x1 • 7.2Φ x1
OB13-21-6W	125	210	55	7Φ x1 • 10Φ x1

Accessories (Optional parts)

Pole mounting belt SNB • PKB series
See page 323 ~ 324

Mounting plate OBP series
See page 14

Accessories (Optional parts)

OBP series MOUNTING PLATE for OB

NEW

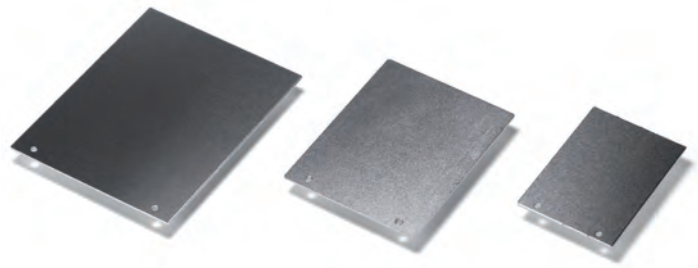

■ Material / Finish : A1050P / Unfinished
■ Aluminium mounting plate for OB series outdoor network box.
■ Recommended to be used for installing network module, sensor, terminal block, etc.

OBP dimensions

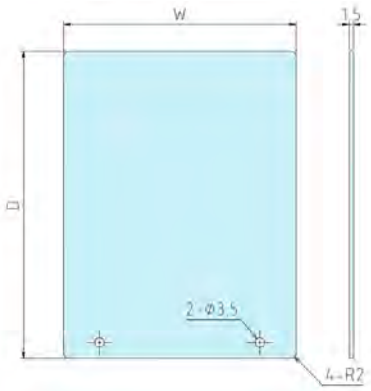

Product no. / Dimensions

Product no.	W	D	Suitable models	Weight (g)
OBP8-14	61.2	92	OB 8-14-4W	22.5
OBP10-17	87.1	115	OB10-17-5W	40
OBP13-21	110	137	OB13-21-6W	61

■ DXF/DWG/PDF drawings available on our website.

IP67 UV-PROTECT NETWORK PLASTIC BOX

WP series

Waterproofing ability by using silicone gasket

Highly elastic and durable silicone gasket for high waterproof ability. The use of insert nuts allows the unit to retain its waterproof ability even after multiple opening and closing.

Weather-resistant ASA material

The white gray "G" type utilize a UV resistant, durable ASA material. Recommended for outdoor usage as a communication device type equipment.

Outdoor use example
Agriculture weather station

Easy installation on walls

Easy mounting onto walls by opening the blind lids. A clean and sleek appearance can be maintained as screws are hidden away by the blind lids.

Easy installation on electrical poles

By using a pole mounting accessory, it can be attached to poles with ease.

Information on waterproofing after hole milling for switches

The waterproof performance will be lost once hole or cutout is milling on IP rated enclosure.
To ensure it remains waterproof after hole/cutout milling, IP rated membrane pad or overlay is required.

Product by Arrow7 (Japan)

WP series APPLICATION EXAMPLE

Outdoor Lighting Remote Controller

Product by GrowFlux (USA)

Leak Guard - Home Water Leak Detector

Product by Veimart (Finland)

Clay Pigeon Shooting Controller

Product by Viktor Gajadacs (Hungary)

Wireless Temperature / Humidity Transmitter

Product by Masibus (India)

WP series APPLICATION EXAMPLE

LoRa Gateway

*LoRa = Long Range Transmission

Product by EASEL (Japan)

LoRaWAN Gateway

Product by Miromico AG (Switzerland)

Immersion Type Water Level Gauge

Product by Bunnyhop (Japan)

Outdoor Cloud Data Logger

Product by Smart Logic (Japan)

Detection Sensor for Bird/Beast Trap

Product by MASPRO (Japan)

Crane Expansion Sensor

Product by mSOLUTIONS (Hong Kong)

Wireless Indoor Air Monitoring System

Product by Pietiko (Finland)

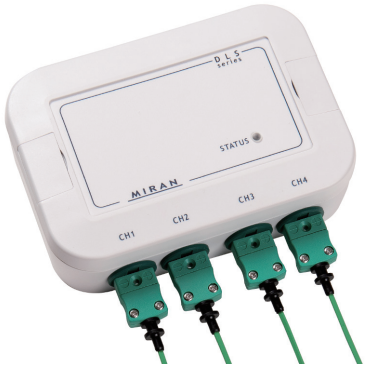

LoRa WAN Pressure Transmitter

Product by ellenex (Australia)

Sigfox Multi Sensor

Product by OMICRON (Columbia)

Network Sensor for Agriculture

Product by Demand Side Instruments (France)

Argonomic Parameter Surveillance Unit

Product by Argotec (Spain)

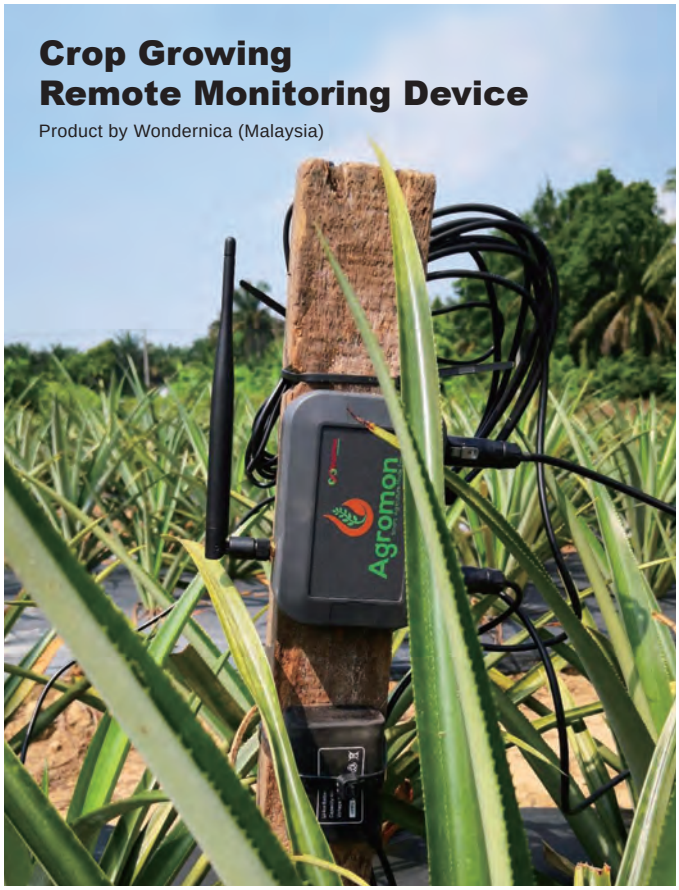

Crop Growing Remote Monitoring Device

Product by Wondernica (Malaysia)

Bird/Beast Damage Control Sensor

Product by Kyowa Techno (Japan)

WP series IP67 / IP68 NETWORK PLASTIC BOX

- IP68 (IP67 for WP20-28-◯) high performance plastic box protected from immersion as long as 24 hours at 1m depth.
- 24 different sizes available in white gray UV-resistant ASA and charcoal gray flame-resistant ABS. Recommended for use as outdoor communication or network devices.
- Mount on walls or brackets by simply opening the blind lids.
- Pole mounting is possible via an optional pole mounting bracket accessory.

IP67 IP68

Technical Data

Protection class :
IP68 (24-hours/1m-depth)
WP20-28-5□ } IP67
WP20-28-7□ } IP67
Operating temperature :
Models = 5-7-□ ~ 20-20-□:
ASA[1]-20 ~ +60°C
ABS -10 ~ +50°C
Models = 20-28-□[2] :
ASA[1]-20 ~ +55°C
ABS -10 ~ +45°C

[1] May become brittle and break under impact when temperature is lowered close to -20°C.
[2] Usage of the PMF series protective vent will raise the temperature limit for ASA and ABS to +60°C and +50°C respectively.
※Refer to page 23 for more information.

WP5-7-2 ~ WP13-18-5

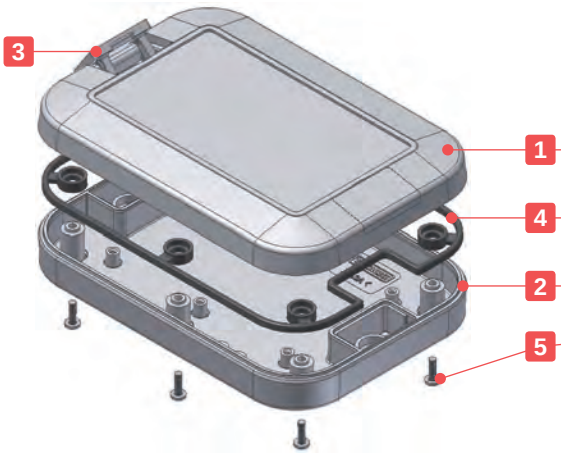

WP15-15-4 ~ WP20-28-7

Components

No.	Part name	Pcs	Material / Color
1	Top cover	1	ASA UL94HB / White gray : Flame-resistant ABS UL94V-0 / Charcoal gray
2	Bottom base	1	ASA UL94HB / White gray : Flame-resistant ABS UL94V-0 / Charcoal gray
3	Blind lids	2	ASA UL94HB / White gray : Flame-resistant ABS UL94V-0 / Charcoal gray
4	Gasket	1	Silicone / Black
5	Screw	4 ~ 8	Stainless steel binding head screw / Unfinished

WP dimensions

■ DXF/DWG/PDF/STP drawings available on our website.

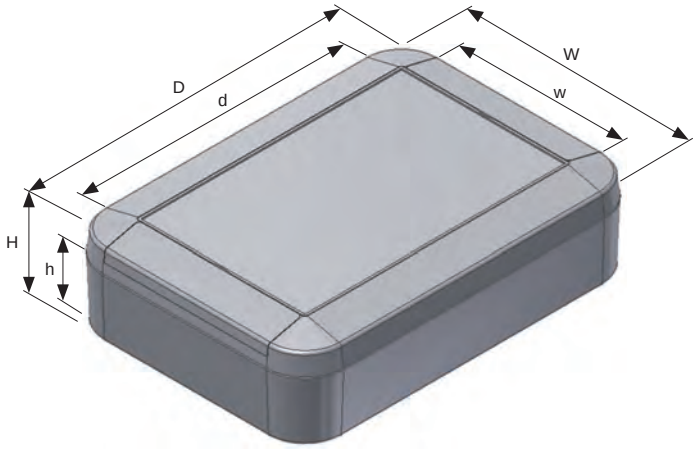

Product no. / Dimensions

Product no.		IP Code	External dimensions			Internal dimensions			Screw	Recommended torque (N • m)	Weight (g)
● White gray (ASA)	● Charcoal gray (ABS)		W	D	H	w	d	h			
WP 5- 7-2G	WP 5- 7-2C	IP68	52	65	18	46	37	13	M2-8 × 4pcs	0.2 ~ 0.25	31.5
WP 5- 7-3G	WP 5- 7-3C	IP68	52	65	27	45	36.5	22	M2-8 × 4pcs	0.2 ~ 0.25	39.5
WP 6- 8-2G	WP 6- 8-2C	IP68	60	80	20	53.5	52	14.7	M2-8 × 4pcs	0.25 ~ 0.3	41.5
WP 6- 8-3G	WP 6- 8-3C	IP68	60	80	30	53	51	24.7	M2-8 × 4pcs	0.25 ~ 0.3	49
WP 8- 8-2G	WP 8- 8-2C	IP68	75	75	22	67	42	16.4	M2.5-8 × 4pcs	0.25 ~ 0.35	57.5
WP 8- 8-4G	WP 8- 8-4C	IP68	75	75	35	66	42	29.4	M2.5-16 × 4pcs	0.25 ~ 0.35	88.5
WP 8-10-2G	WP 8-10-2C	IP68	75	100	22	67	67	16	M2.5-8 × 4pcs	0.25 ~ 0.35	74
WP 8-10-4G	WP 8-10-4C	IP68	75	100	35	66	67	29	M2.5-16 × 4pcs	0.25 ~ 0.35	95
WP 9-13-3G	WP 9-13-3C	IP68	90	130	25	81	91	18	M2.5-8 × 6pcs	0.25 ~ 0.35	113
WP 9-13-4G	WP 9-13-4C	IP68	90	130	40	81	91	33	M2.5-16 × 6pcs	0.25 ~ 0.35	141
WP10-10-3G	WP10-10-3C	IP68	100	100	25	90	61	18	M2.5-8 × 4pcs	0.25 ~ 0.35	96
WP10-10-4G	WP10-10-4C	IP68	100	100	40	90	61	33	M2.5-16 × 4pcs	0.25 ~ 0.35	121
WP11-15-3G	WP11-15-3C	IP68	110	150	27	100	110	20	M2.5-8 × 6pcs	0.25 ~ 0.35	153
WP11-15-4G	WP11-15-4C	IP68	110	150	40	100	110	33	M2.5-16 × 6pcs	0.25 ~ 0.35	181
WP13-18-3G	WP13-18-3C	IP68	130	175	30	120	135	23	M2.5-8 × 6pcs	0.25 ~ 0.35	225
WP13-18-5G	WP13-18-5C	IP68	130	175	45	120	135	38	M2.5-16 × 6pcs	0.25 ~ 0.35	266
WP15-15-4G	WP15-15-4C	IP68	150	150	40	141	100	33.5	M3-8 × 4pcs	0.35 ~ 0.45	239
WP15-15-6G	WP15-15-6C	IP68	150	150	55	140	100	48.5	M3-8 × 4pcs	0.35 ~ 0.45	282.5
WP15-21-4G	WP15-21-4C	IP68	150	210	40	141	160	33.5	M3-8 × 6pcs	0.35 ~ 0.45	323
WP15-21-6G	WP15-21-6C	IP68	150	210	55	140	160	48.5	M3-8 × 6pcs	0.35 ~ 0.45	367.5
WP20-20-5G	WP20-20-5C	IP68	200	200	45	190	150	38.5	M3-8 × 8pcs	0.45 ~ 0.55	446
WP20-20-7G	WP20-20-7C	IP68	200	200	65	189	149	58.5	M3-8 × 8pcs	0.45 ~ 0.55	524.5
WP20-28-5G	WP20-28-5C	IP67	200	280	45	190	230	38.5	M3-8 × 8pcs	0.45 ~ 0.55	557.5
WP20-28-7G	WP20-28-7C	IP67	200	280	65	189	229	58.5	M3-8 × 8pcs	0.45 ~ 0.55	646

■ Recommended torque listed is for reference only; actual may differ. Assemble after testing torque.

Accessories (Optional parts)

Pole mount bracket WPMB series
See page 21

Rubber feet PFRF series
See page 22

TORX screw MR series
See page 22

PCB mounting screw EM series
See page 123

Protective vent PMF series
See page 325 ~ 326

Cable gland
See page 333 ~ 340

Pole mounting belt PKB-10 series
See page 324

Tapping standoff TPS series
See page 122

WPMB series POLE MOUNTING BRACKET for WP

- Pole mount bracket made from weather resistant ASA material.
- Hole milling is not required when installing the mount bracket, thus allowing the enclosure to maintain its IP67 protection.
- WPMB-M4-2 can be used for both vertical and horizontal installation.
- Together with WPMB series, the PKB series mounting belt allows the unit to be mounted onto a pole.

WPMB dimensions

- DXF/DWG/PDF/STP drawings available on our website.

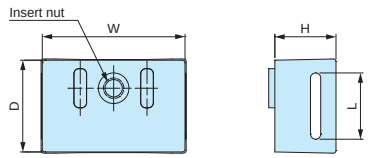

WPMB-M3 • WPMB-M4

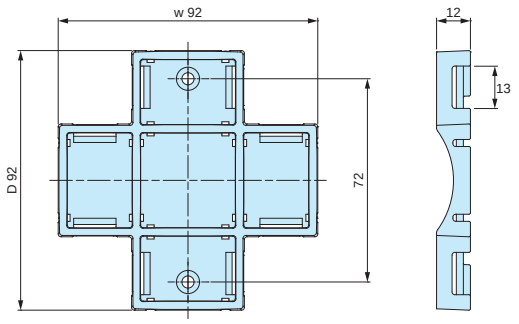

WPMB-M4-2

Color Type

Code	Color
G	White gray
D	Dark gray

Product no. / Dimensions

- Please suffix color code at the end of the product number.

Product no.	Dimensions				Screw	Suitable models	Recommended torque (N • m)	Weight (g)	Pack of
	W	D	H	L					
WPMB-M3□	18	14	9.5	11	Stainless steel M3-6 x 2 pcs	WP5-7-2 • 5-7-3 • 6-8-2 • 6-8-3 • 8-8-2 • 8-8-4 • 8-10-2 • 8-10-4	0.4 ~ 0.45	3	2
WPMB-M4□	28	18	12	13	Stainless steel M4-8 x 2 pcs	WP9-13-3 • 9-13-4 • 10-10-3 • 10-10-4 • 11-15-3 • 11-15-4 • 13-18-3 • 13-18-5	0.45 ~ 0.5	10	2
WPMB-M4-2□	92	92	12	13	Stainless steel M4-6 x 2 pcs	WP15-15-4 • 15-15-6 • 15-21-4 • 15-21-6 • 20-20-5 • 20-20-7 • 20-28-5 • 20-28-7	0.45 ~ 0.5	24	1

- Recommended torque listed is for reference only; actual may differ. Assemble after testing torque.

WPMB-M3 / WPMB-M4

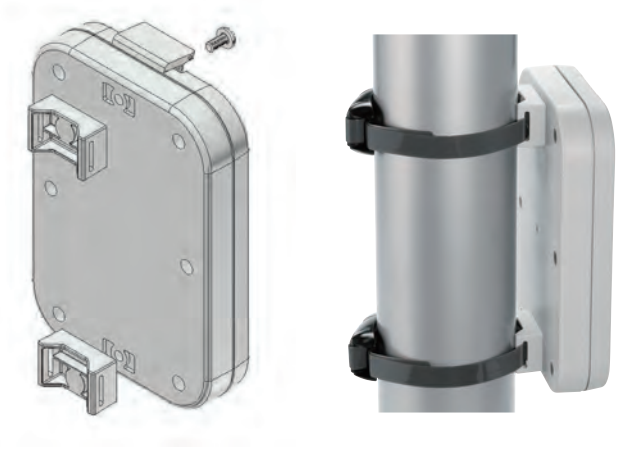

WPMB-M4-2

PFRF series RUBBER FEET

PFRF dimensions

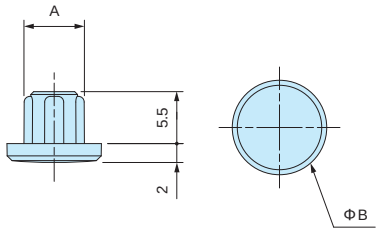

■ STP drawings available on our website.

■ Recommended to be used with WP series as a desktop-type unit.
■ No additional hole milling is required as the rubber feet fits snuggly into the screw holes.
■ Made from elastomer material.
■ Unavailable for use with WP5-7-2, 5-7-3, 6-8-2, and 6-8-3 models.

Product no. / Dimensions

Product no.	Dimensions		Material	Color	Suitable models	Pack of
	A	B				
PFRF-M2.5D	6.4	10	Elastomer UL94HB	Dark gray	WP8-8-2 • 8-8-4 • 8-10-2 • 8-10-4 • 9-13-3 • 9-13-4 • 10-10-3 • 10-10-4 • 11-15-3 • 11-15-4 • 13-18-3 • 13-18-5	4
PFRF-M3D	7.2	11	Elastomer UL94HB	Dark gray	WP15-15-4 • 15-15-6 • 15-21-4 • 15-21-6 • 20-20-5 • 20-20-7 • 20-28-5 • 20-28-7	4

MR series TORX SCREW

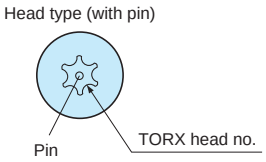

■ Recommended to be used for tamper resistance, or for an elegant look and feel.
■ Requires the use of a specialized screwdriver.
■ Unavailable for use with WP5-7-2, 5-7-3, 6-8-2, and 6-8-3 models.

Product no. / Dimensions

Product no.	Dimensions		TORX head no.	Material	Finish	Suitable models	Pack of
	M	L					
MR2.5-8ST	2.5	8	T 8 (with pin)	Stainless steel	Unfinished	WP8-8-2 • 8-10-2 • 9-13-3 • 10-10-3 • 11-15-3 • 13-18-3/WSC series	20
MR2.5-16ST	2.5	16	T 8 (with pin)	Stainless steel	Unfinished	WP8-8-4 • 8-10-4 • 9-13-4 • 10-10-4 • 11-15-4 • 13-18-5	20
MR3-8ST	3	8	T 10 (with pin)	Stainless steel	Unfinished	WP15-15-4 • 15-15-6 • 15-21-4 • 15-21-6 • 20-20-5 • 20-20-7 • 20-28-5 • 20-28-7	20

Effect of PMF protective vent on WP series box

WP series enclosure comes with a silicone gasket, which allows the enclosure to be airtight when assembled.

When used in environments where there are large temperature fluctuations or differences, the internal and external pressure will become uneven.
If this pressure within is unable to be properly vented, it may cause the enclosure to deform and warp.
By installing the PMF series protective vent, it will assist in equalizing the air pressure, and prevent potential deformation.

Evaluation Target

1. WP20-28-7G - 2 pcs / 2. WP20-28-7G with PMF-12HAS - 2 pcs

Test Conditions

Device : Constant temperature/humidity test chamber - LH43-W14P
Make : NAGANO SCIENCE CO., LTD.
Testing in -20ºC ~ +60ºC (Operating temperature for WP series)
Low Temperature : -20ºC / 96 hours • High Temperature : +60ºC / 96 hours

Test Result

1. WP20-28-7G - 2 pcs

Uneven internal and external pressure causes deformation of the enclosure.

Before

Low Temp. Test

1. First piece

Top • Bottom / Contracted

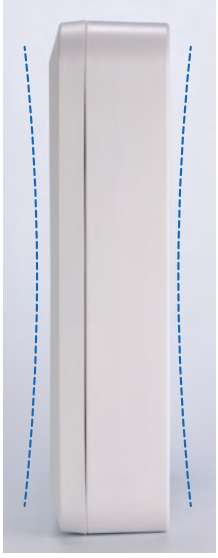

Before

High Temp. Test

1. Second piece

Top • Bottom / Expanded

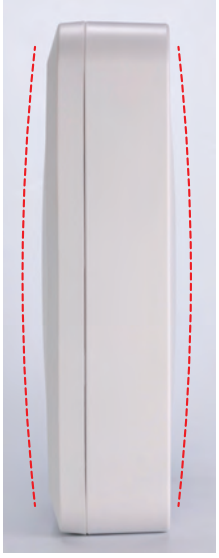

Test Result

2. WP20-28-7G with PMF-12HAS - 2 pcs

Equalized pressure from the usage of a protective vent prevents deformation of the enclosure.

Before

Low Temp. Test

2. First piece

To • Bottom / No deformation

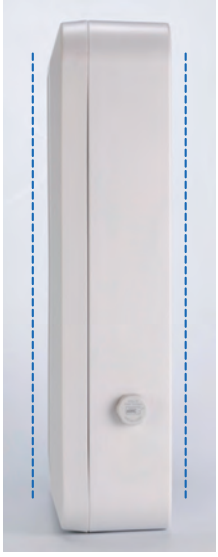

Before

High Temp. Test

2. Second piece

Top • Bottom / No deformation

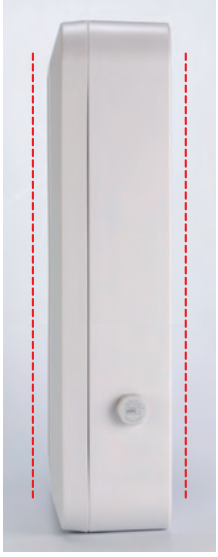

Information on installation of cable glands

■ When affixing on cable glands to areas without sufficient space, the nut may not be able to be properly secured on.
For such instances, a thread-hole should be made for the cable gland to be directly screwed into without utilizing the nut.

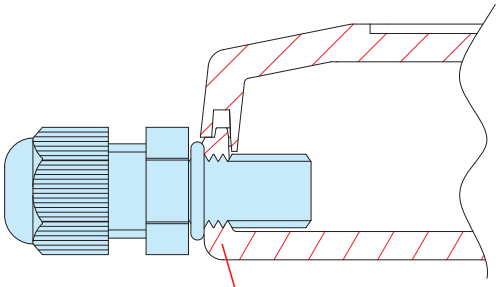

Cross-section

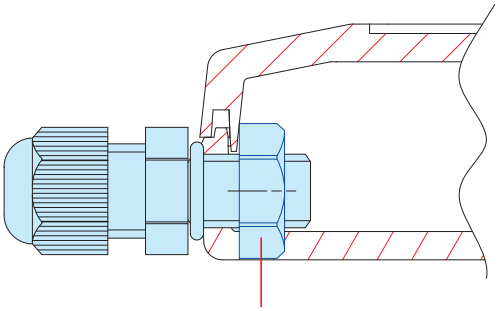

Obstruction

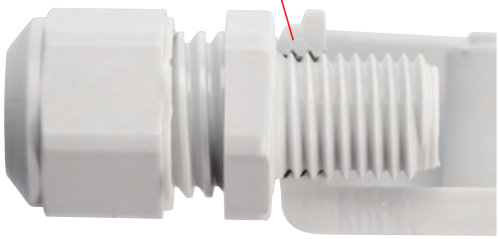

■ Thread-hole sizes from M6~M32, and PG7~PG21 are possible with our customization services

■ Please utilize a cable gland from our available range of cable gland accessories.
Refer to page 333 ~ 340 for more information.

TPS series TAPPING STANDOFF

NEW SIZE

TPS dimensions

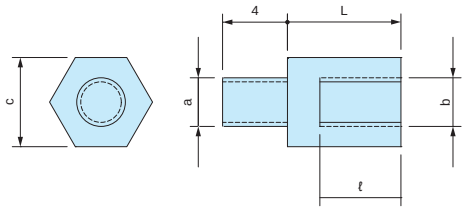

■ DXF/DWG/PDF drawings available on our website.

■ Tapping screw head allows for easy installation onto existing enclosure boss mount.

■ 4 different sizes available : M2.3, M2.6, M3 and M4 size.

Product no. / Dimensions

■ Material / Finish : Brass / Unfinished

Product no.	Screw size (a)	Screw size (b)	c	L	ℓ	Pack of	Suitable models
TPS-M2.3-4	M2.3	M2.3	5	4	3	4	WH series • PFE series LC • LCE • LCS • LCT series PF • PFF series (M2.3 boss models) TW • TWN • TWF series (M2.3 boss models) WP series (M2.3 boss models)
TPS-M2.3-5	M2.3	M2.3	5	5	3	4	
TPS-M2.3-6	M2.3	M2.3	5	6	4	4	
TPS-M2.3-7	M2.3	M2.3	5	7	5	4	
TPS-M2.3-8	M2.3	M2.3	5	8	6	4	
TPS-M2.3-10	M2.3	M2.3	5	10	6	4	
TPS-M2.3-12	M2.3	M2.3	5	12	6	4	
TPS-M2.6-4	M2.6	M2.6	5	4	3	4	PF • PFF series (M2.6 boss models) WP series (M2.6 boss models)
TPS-M2.6-5	M2.6	M2.6	5	5	3	4	
TPS-M2.6-7	M2.6	M2.6	5	7	5	4	
TPS-M2.6-10	M2.6	M2.6	5	10	6	4	
TPS-M2.6-12	M2.6	M2.6	5	12	6	4	
TPS-M3-4	M3	M3	5.5	4	3	4	TWS • TW • TWN • TWF series (M3 boss models)
TPS-M3-5	M3	M3	5.5	5	3	4	
TPS-M3-6	M3	M3	5.5	6	4	4	
TPS-M3-7	M3	M3	5.5	7	5	4	
TPS-M3-8	M3	M3	5.5	8	5	4	
TPS-M3-10	M3	M3	5.5	10	6	4	
TPS-M3-12	M3	M3	5.5	12	6	4	
NEW TPS-M4-6	M4	M4	7	6	4	4	BCAP • BCPC • BCPK • BCAR • BCPR series (M4 boss models)
NEW TPS-M4-10	M4	M4	7	10	6	4	
NEW TPS-M4-15	M4	M4	7	15	8	4	
NEW TPS-M4-20	M4	M4	7	20	10	4	

■ Please use a suitable sized socket driver to both secure and loosen the tapping standoff.

MT series PCB MOUNTING SCREWS for TPS

Pan head

■ PCB mounting Screws for TPS tapping standoffs

Product no. / Dimensions

Product no.	M	L	Head style	Material	Finish	Pack of
MT2.3-4	2.3	4	Pan	Steel	Trivalent chromate	20
MT2.3-6	2.3	6		Steel	Trivalent chromate	20
MT2.6-4	2.6	4		Steel	Trivalent chromate	20
MT3-4	3	4		Steel	Trivalent chromate	20

EM series PCB MOUNTING SCREW

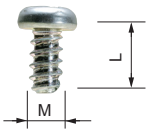

- Self-tapping screws for mounting PCB on bosses or standoffs.
- EM-3-6 self-tapping screws are suitable for mounting 1.6mm or thicker PCB.

Product no. / Dimensions

Product no.	M	L	Material	Finish	Suitable models	Pack of
EM-1.6	1.6	4	Steel	Trivalent chromate	CSS • CS WC • PS (M1.6 boss models)	50
EM-2	2	5	Steel	Trivalent chromate	SIC • SIM • WC • PS • TW • TWN • TWF PF • WC • WP (M2 boss models)	50
EM-2.3	2.3	6	Steel	Trivalent chromate	WH • LC • LCT • LCS • LCE • PFE WSC (Top cover bosses) PF • PFF (M2.3 boss models) TW • TWN • TWF (M2.3 boss models) WP (M2.3 boss models)	50
EM-2.3-8	2.3	8	Steel	Trivalent chromate	WSC (Bottom base bosses)	50
EM-2.6	2.6	6	Steel	Trivalent chromate	PF • PFF • WP (M2.6 boss models)	50
EM-3	3	5	Steel	Trivalent chromate	TWS • TW • TWN • TWF (M3 boss models)	50
EM-3-6	3	6	Steel	Trivalent chromate		50

MR series TORX SCREW

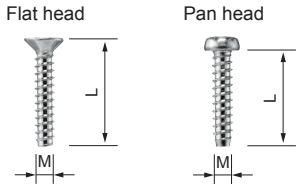

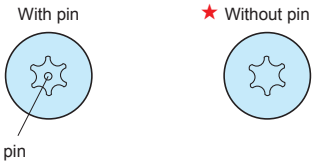

- Self-tapping torx screws for securing of the enclosure.

★ : MR1.6-6S, MR-2S, MR2.6-10□, and MR3-14□ are without pin.

Product no. / Dimensions

★Mark = Without pin

Product no.	M	L	head no.	Head style	Material	Finish	Suitable models	Pack of
MR1.6-6S★	1.6	6	T3	Pan	Steel	Nickel plated	CSS • CS	20
MR2.5-8PS	2.5	8	T8	Pan	Steel	Nickel plated	PF • PFE • PFF (M2.5 size)	20
MR2.6-10S★	2.6	10	T8	Flat	Steel	Nickel plated	TW • TWN (M2.6 size) TWF (M2.6 size) MX • MXA • MXB • MXF (M2.6 size)	20
MR2.6-10B★	2.6	10	T8	Flat	Steel	Black trivalent chromate		20
MR2.6-12PS	2.6	12	T8	Pan	Steel	Nickel plated	LCT • LCS • LC115-F2 / F3 LCT • LCS • LC145S-F6	20
MR2.6-14PS	2.6	14	T8	Pan	Steel	Nickel plated	LCT • LCS • LC115H-F2 / F3 / M2 / 9V LCT • LCS • LC135-F4 / M2 / M3 / 9V LCT • LCS • LC135H-F4 / M2 / M3 / 9V LCT • LCS • LC145-F6 / M2 / M4 LCT • LCS • LC145H-F6 / M2 / M4 LCT • LCS • LC165-M4 LCT • LCS • LC165H-M4	20
MR2.6-14S	2.6	14	T8	Flat	Steel	Nickel plated	LCT • LCS • LC115-N / F2 / F3 LCT • LCS • LC145S-F6 / 145S-N LCE115-N TW • TWN7-2-11 / 7-4-11 / 7-5-11 TWF7-2-11 / 7-4-11 / 7-5-11 / 8-2-8 / 8-4-8	20
MR2.6-18S	2.6	18	T8	Flat	Steel	Nickel plated	LCT • LCS • LC115H-N / F2 / F3 / M2 / 9V LCT • LCS • LC135-N / F4 / M2 / M3 / 9V LCT • LCS • LC135H-N / F4 / M2 / M3 / 9V LCT • LCS • LC145-N / F6 / M2 / M4 LCT • LCS • LC145H-N / F6 / M2 / M4 LCT • LCS • LC165-N / M4 LCT • LCS • LC165H-N / M4 LCE115H-N • LCE135-N • LCE145H-N • LCE165H-N	20
MR3-8PS	3	8	T10	Pan	Steel	Nickel plated	PF • PFE • PFF (M3 size)	20
MR3-14S★	3	14	T10	Flat	Steel	Nickel plated	TW • TWN (M3 size) TWF (M3 size) MX • MXA • MXB • MXF (M3 size)	20
MR3-14B★	3	14	T10	Flat	Steel	Black trivalent chromate		20
MR-1S	3	5	T10	Flat	Steel	Nickel plated	UC	20
MR-1B	3	5	T10	Flat	Steel	Black trivalent chromate		20

TAKACHI

TAKACHI ELECTRONICS ENCLOSURE CO., LTD.

3-21-16 Higashi-ryoke, Kawaguchi-shi, Saitama, 332-0003 JAPAN

Tel. +81-48-222-5409 / Fax. +81-48-222-7652

June 11, 2021

NOTICE

BCAP・BCPC・BCPK・BCAR・BCPR Series
Changes to Hinge Design

■ Change : Hinge design.

Current (Old) Hinge Design

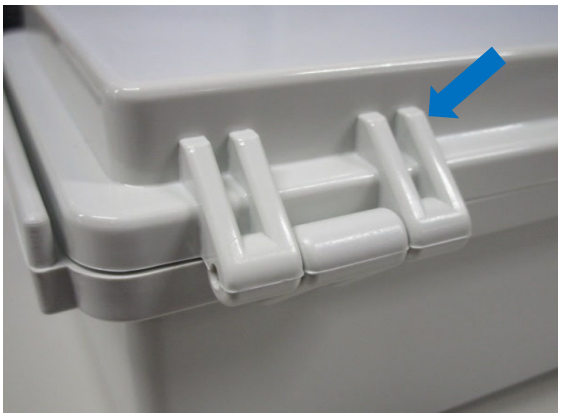

New Hinge Design

■ Affected series / models

BCAP Series		BCPC Series	BCPK Series		BCAR Series		BCPR Series
BCAP112107G	BCAP112107T	BCPC112107S	BCPK112107S	BCPK112107T	BCAR112107G	BCAR112107T	BCPR112107S
BCAP112110G	BCAP112110T	BCPC112110S	BCPK112110S	BCPK112110T	BCAR112110G	BCAR112110T	BCPR112110S
BCAP112607G	BCAP112607T	BCPC112607S	BCPK112607S	BCPK112607T	BCAR112607G	BCAR112607T	BCPR112607S
BCAP112610G	BCAP112610T	BCPC112610S	BCPK112610S	BCPK112610T	BCAR112610G	BCAR112610T	BCPR112610S
BCAP406018G	BCAP406018T	BCPC406018S	BCPK406018S	BCPK406018T	BCAR203013G	BCAR203013T	BCPR203013S
BCAP406023G	BCAP406023T	BCPC406023S	BCPK406023S	BCPK406023T	BCAR203015G	BCAR203015T	BCPR203015S
BCAP203013G	BCAP203013T	BCPC203013S	BCPK203013S	BCPK203013T	BCAR203018G	BCAR203018T	BCPR203018S
BCAP203015G	BCAP203015T	BCPC203015S	BCPK203015S	BCPK203015T	BCAR304012G	BCAR304012T	BCPR304012S
BCAP203018G	BCAP203018T	BCPC203018S	BCPK203018S	BCPK203018T	BCAR304015G	BCAR304015T	BCPR304015S
BCAP304012G	BCAP304012T	BCPC304012S	BCPK304012S	BCPK304012T	BCAR304018G	BCAR304018T	BCPR304018S
BCAP304015G	BCAP304015T	BCPC304015S	BCPK304015S	BCPK304015T	BCAR354512G	BCAR354512T	BCPR354512S
BCAP304018G	BCAP304018T	BCPC304018S	BCPK304018S	BCPK304018T	BCAR354516G	BCAR354516T	BCPR354516S
BCAP354512G	BCAP354512T	BCPC354512S	BCPK354512S	BCPK354512T	BCAR354520G	BCAR354520T	BCPR354520S
BCAP354516G	BCAP354516T	BCPC354516S	BCPK354516S	BCPK354516T	BCAR507018G		BCPR507018S
BCAP354520G	BCAP354520T	BCPC354520S	BCPK354520S	BCPK354520T	BCAR507025G		BCPR507025S
BCAP507018G		BCPC507018S	BCPK507018S				
BCAP507025G		BCPC507025S	BCPK507025S				

■ Effective date : Once present inventory has run out / been depleted.

■ Note : No changes to item product number, color, finish, or pricing.

IP65 LATCH-HINGED PLASTIC BOX

Stainless steel and plastic mounting brackets are available.
See page 320

BCAR • BCPR series comes with an attachable BRF series outdoor roof.
See page 309 ~ 310 and 315 ~ 316

Pole mounting bracket for pole installation
See page 321 ~ 324

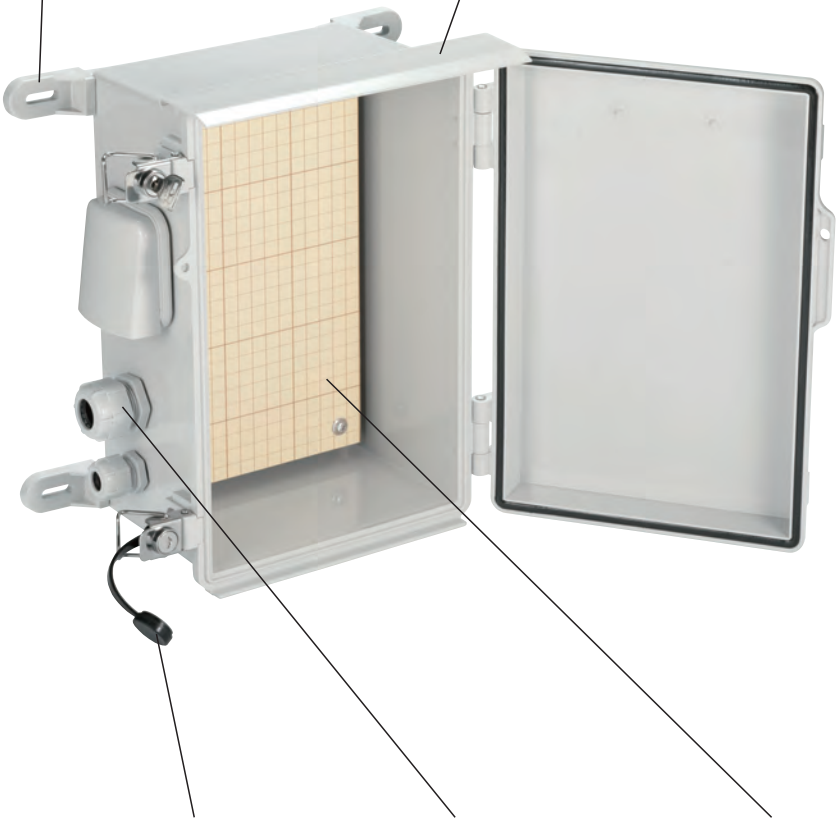

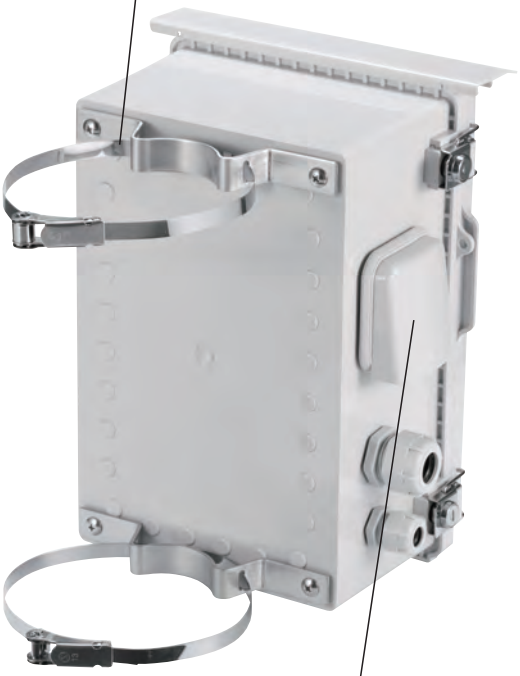

Dust protection cap (for lock/key type)
See page 316

Cable gland
For waterproofing enclosure openings for cables and wires
See page 333 ~ 340

Mounting plate
3 types of mounting plates are available (plastic / steel / wood)
See page 317 ~ 319

Ventilation cover
For heat dissipation and prevention of condensation build-up
See page 328

APPLICATION EXAMPLE

Universal plastic enclosure series suitable for a wide range of applications such as FA/control, electrical switchboard, network communication and so on.

Outdoor WiFi Spot

Product by Spectra Quest Lab. (Japan)

Solar Power Junction Box

Product by Kansai Denki (Japan)

Power Switchboard Box

Agricultural 8-Channel Data Logger

Product by Argotec (Spain)

Environmental Data Measurement and Controller Unit

Product by eSOL (Japan)

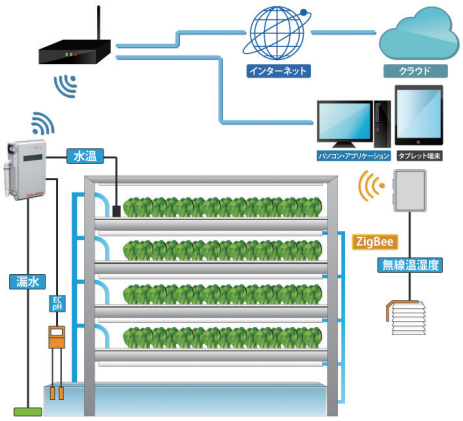

"SenSu" Communication Unit with Sensor

Product by DATA TECHNOLOGY (Japan)

Network Sensor System for Agriculture

Product by CM Engineering (Japan)

Wildlife Damage Monitoring System

Product by CM Engineering (Japan)

Valve Controller

Product by EXEN (Japan)

Building Surveillance Unit

Product by Showa Denki (Japan)

Digital Pressure Gauge

Product by KRONE CORPORATION (Japan)

Radiation Monitor

Anemometer

Product by Fieldpro (Japan)

Water Gauge

Product by Fieldpro (Japan)

Monitoring Camera

Product by ACE PROMOTION (Japan)

BCAP series — IP65 LATCH-HINGED ABS PLASTIC BOX

NEW SIZE

BCPC series — IP65 LATCH-HINGED POLYCARBONATE PLASTIC BOX

NEW SIZE

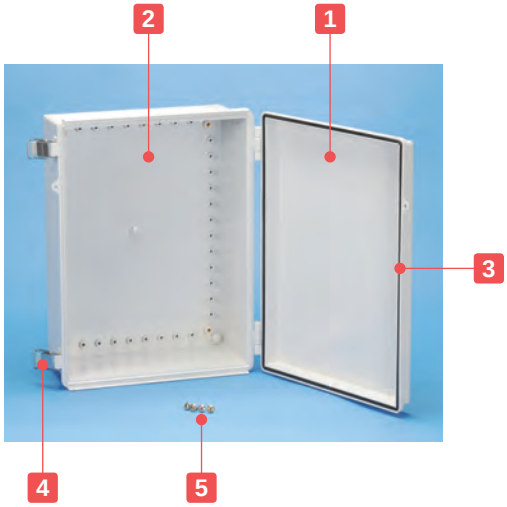

IP65

Technical Data

Protection class: IP65
Operating temperature:
BCAP -10°C ~ +60°C
BCPC -20°C ~ +75°C

- UL mark is only applicable for BCPC series.

- IP65 latch-hinged box for easy opening and closing.
- 50 different sizes available.
- Applicable for various uses in fields such as FA, network communication, power switch controls and so on.
- BCAP series is made of white gray ABS with 2 different cover types (white gray ABS and transparent polycarbonate) available.
- BCPC series is made of light gray UL94V-0 polycarbonate, which has good heat resistant properties.

Components : BCAP series

No.	Part name	Pcs	Material	Color / Finish
1	Top cover	1	ABS UL94HB • Polycarbonate UL94V-0	White gray • Transparent
2	Base	1	ABS UL94HB	White gray
3	Gasket	1	Polyurethane	Black
4	Latch	1 ~ 3	Stainless steel	Unfinished
5	Screw for mounting plate	2 ~ 8	Steel	Trivalent chromate

- Stainless steel mounting brackets are included together with the following models : 506018, 506025, 507018, 507025, 608018, and 608028.

Components : BCPC series

No.	Part name	Pcs	Material	Color / Finish
1	Top cover	1	Polycarbonate UL94V-0	Light gray
2	Base	1	Glass fiber filled polycarbonate UL94V-0	Light gray
3	Gasket	1	Polyurethane	Black
4	Latch	1 ~ 3	Stainless steel	Unfinished
5	Screw for mounting plate	2 ~ 8	Steel	Trivalent chromate

- Stainless steel mounting brackets are included together with the following models : 506018, 506025, 507018, 507025, 608018, and 608028.

Color Type

Color code	Top cover color / Material	Base color / Material
BCAP G	White gray / ABS	White gray / ABS
BCAP T	Transparent / Polycarbonate	White gray / ABS
BCPC S	Light gray / Polycarbonate	Light gray / Glass fiber filled polycarbonate

■ Please suffix color code at the end of the product number.

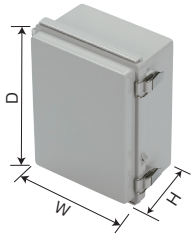

BCAP Product no. / Dimensions

Product no.	W	D	H	Weight (g) G	Weight (g) T
BCAP091207□	90	120	70	196	204
BCAP091208□	90	120	85	212	221
BCAP101507□	100	150	70	272	281
BCAP101508□	100	150	85	291	300
BCAP112107□	110	210	75	359	378
BCAP112110□	110	210	100	422	420
BCAP112607□	110	260	75	431	446
BCAP112610□	110	260	100.5	484	500
BCAP131508□	135	155	85	356	357
BCAP131808□	135	185	85.5	381	410
BCAP131810□	135	185	100.5	396	402
BCAP151509□	150	150	90	343	353
BCAP151512□	150	150	120.5	411	425
BCAP162110□	160	210	100	468	486
BCAP162113□	160	210	130	517	537
BCAP162610□	160	260	100	577	601
BCAP162613□	160	260	130	673	701
NEW BCAP172210□	170	220	105	545	581
BCAP172711□	170	270	110.5	670	680
BCAP192810□	190	280	100.5	722	746
BCAP192814□	190	280	141	877	901
NEW BCAP203013□N	200	300	130	921	954
NEW BCAP203015□N	200	300	150	989	1,022
NEW BCAP203018□N	200	300	180	1,110	1,143
BCAP212110□	210	210	100	630	656
BCAP212113□	210	210	130	704	726
NEW BCAP253515□N	250	350	150	1,278	1,320
NEW BCAP253518□N	250	350	180	1,415	1,456
BCAP282813□	280	280	130.5	1,167	1,200
BCAP283813□	280	380	130	1,455	1,512
BCAP303015□	300	300	151	1,339	1,418
BCAP303018□	300	300	181	1,495	1,576
BCAP304012□	300	400	120	1,508	1,575
BCAP304015□	300	400	150	1,563	1,675
BCAP304018□	300	400	181	1,719	1,853
BCAP353515□	350	350	150	1,693	1,764
BCAP353518□	350	350	181	1,845	1,906
BCAP354512□	350	450	120	2,068	2,167
BCAP354516□	350	450	160	2,382	2,514
BCAP354520□	350	450	201	2,646	2,794
BCAP405016□	400	500	160	2,660	2,839
BCAP405020□	400	500	201	3,119	3,232
BCAP406018□	400	600	181	3,542	3,652
BCAP406023□	400	600	231	3,870	4,044
BCAP506018□	530	630	185	5,438	5,611
BCAP506025□	530	630	255	6,078	6,273
BCAP507018G	530	730	188	6,241	—
BCAP507025G	530	730	258	6,911	—
BCAP608018G	630	830	188	8,131	—
BCAP608028G	630	830	288	9,570	—

■ BCAP507018, 507025, 608018, and 608028 models are only available as G color type.

BCPC Product no. / Dimensions

Product no.	W	D	H	Weight (g)
BCPC091207S	90	120	70	226
BCPC091208S	90	120	85	247
BCPC101507S	100	150	70	312
BCPC101508S	100	150	85	336
BCPC112107S	110	210	75	420
BCPC112110S	110	210	100	473
BCPC112607S	110	260	75	493
BCPC112610S	110	260	100.5	569
BCPC131508S	135	155	85	406
BCPC131808S	135	185	85.5	452
BCPC131810S	135	185	100.5	448
BCPC151509S	150	150	90	395
BCPC151512S	150	150	120.5	482
BCPC162110S	160	210	100	556
BCPC162113S	160	210	130	611
BCPC162610S	160	260	100	671
BCPC162613S	160	260	130	779
NEW BCPC172210S	170	220	105	642
BCPC172711S	170	270	110.5	775
BCPC192810S	190	280	100.5	858
BCPC192814S	190	280	141	1,028
NEW BCPC203013SN	200	300	130	1,070
NEW BCPC203015SN	200	300	150	1,150
NEW BCPC203018SN	200	300	180	1,295
BCPC212110S	210	210	100	742
BCPC212113S	210	210	130	827
NEW BCPC253515SN	250	350	150	1,485
NEW BCPC253518SN	250	350	180	1,648
BCPC282813S	280	280	130.5	1,371
BCPC283813S	280	380	130	1,695
BCPC303015S	300	300	151	1,610
BCPC303018S	300	300	181	1,760
BCPC304012S	300	400	120	1,846
BCPC304015S	300	400	150	1,862
BCPC304018S	300	400	181	2,030
BCPC353515S	350	350	150	2,045
BCPC353518S	350	350	181	2,142
BCPC354512S	350	450	120	2,397
BCPC354516S	350	450	160	2,826
BCPC354520S	350	450	201	3,151
BCPC405016S	400	500	160	3,188
BCPC405020S	400	500	201	3,811
BCPC406018S	400	600	181	4,153
BCPC406023S	400	600	231	4,637
BCPC506018S	530	630	185	6,305
BCPC506025S	530	630	255	7,213
BCPC507018S	530	730	188	7,410
BCPC507025S	530	730	258	8,200
BCPC608018S	630	830	188	9,820
BCPC608028S	630	830	288	11,550

■ Refer to page 311 ~ 314 for detailed dimensions.

Accessories (Optional parts)

Mounting plate BMP series
See page 317 ~ 319

Mounting bracket CK • BFL series
See page 320

Pole mounting bracket SSK series
See page 321 ~ 322

Cable gland
See page 333 ~ 340

Ventilation parts
See page 325 ~ 328

BCPK series IP65 POLYCARBONATE PLASTIC BOX with LOCK

NEW SIZE

Transparent cover type is available as BTO (Built-to-order) with an estimated lead-time of around 2 months. See website for more details.

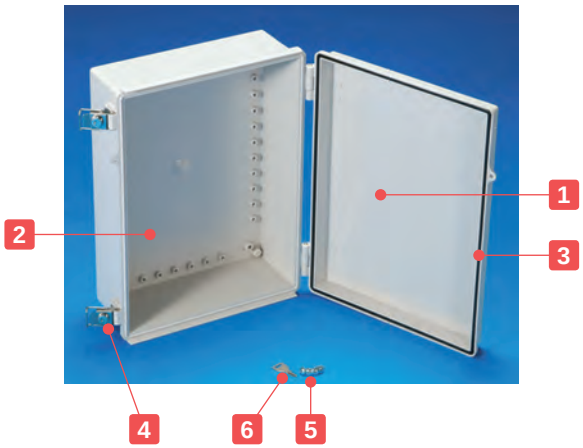

IP65

Technical Data

Protection class : IP65
Operating temperature: -20°C ~ +75°C

*Lock types vary according to box size.

Box size
BCPK091207 ~ 172711
BCPK212110, 212113

Box size
BCPK192810 ~ 203018
BCPK253515 ~ 608028

- Lockable enclosure best used for tamper prevention in FA, control box, and network communication fields.
- BCPK polycarbonate box is resistant against heat and flames. 50 different sizes available.

Components

No.	Part name	Pcs	Material	Color / Finish
1	Top cover	1	Polycarbonate UL94V-0	Light gray
2	Base	1	Glass fiber filled polycarbonate UL94V-0	Light gray
3	Gasket	1	Polyurethane	Black
4	Latch	1 ~ 3	Stainless steel	Unfinished
5	Screw for mounting plate	2 ~ 8	Steel	Trivalent chromate
6	Key	1 ~ 2	Diecast zinc • Brass	Chrome plated • Nickel plated

- Stainless steel mounting brackets are included together with the following models : 506018, 506025, 507018, 507025, 608018, and 608028.
- Quantity of keys provided vary by the number of locks present.

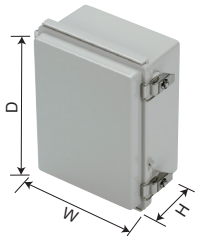

Product no. / Dimensions

	Product no.	W	D	H	Weight (g)
	BCPK091207S	90	120	70	242
	BCPK091208S	90	120	85	264
	BCPK101507S	100	150	70	339
	BCPK101508S	100	150	85	360
	BCPK112107S	110	210	75	437
	BCPK112110S	110	210	100	501
	BCPK112607S	110	260	75	520
	BCPK112610S	110	260	100.5	585
	BCPK131508S	135	155	85	430
	BCPK131808S	135	185	85.5	474
	BCPK131810S	135	185	100.5	471
	BCPK151509S	150	150	90	419
	BCPK151512S	150	150	120.5	507
	BCPK162110S	160	210	100	563
	BCPK162113S	160	210	130	630
	BCPK162610S	160	260	100	728
	BCPK162613S	160	260	130	805
NEW	BCPK172210S	170	220	105	664
	BCPK172711S	170	270	110.5	771
	BCPK192810S	190	280	100.5	875
	BCPK192814S	190	280	141	1,065
NEW	BCPK203013SN	200	300	130	1,098
NEW	BCPK203015SN	200	300	150	1,179
NEW	BCPK203018SN	200	300	180	1,324
	BCPK212110S	210	210	100	743
	BCPK212113S	210	210	130	822
NEW	BCPK253515SN	250	350	150	1,513
NEW	BCPK253518SN	250	350	180	1,676
	BCPK282813S	280	280	130.5	1,391
	BCPK283813S	280	380	130	1,811
	BCPK303015S	300	300	151	1,670
	BCPK303018S	300	300	181	1,782
	BCPK304012S	300	400	120	1,858
	BCPK304015S	300	400	150	1,912
	BCPK304018S	300	400	181	2,083
	BCPK353515S	350	350	150	2,067
	BCPK353518S	350	350	181	2,175
	BCPK354512S	350	450	120	2,442
	BCPK354516S	350	450	160	2,863
	BCPK354520S	350	450	201	3,156
	BCPK405016S	400	500	160	3,149
	BCPK405020S	400	500	201	3,725
	BCPK406018S	400	600	181	4,159
	BCPK406023S	400	600	231	4,639
	BCPK506018S	530	630	185	5,339
	BCPK506025S	530	630	255	7,136
	BCPK507018S	530	730	188	7,470
	BCPK507025S	530	730	258	8,260
	BCPK608018S	630	830	188	9,880
	BCPK608028S	630	830	288	11,610

■ Refer to page 311 ~ 314 for detailed dimensions.

Accessories (Optional parts)

Dust protection cap BCC series
See page 316

Mounting plate BMP series
See page 317 ~ 319

Mounting bracket CK • BFL series
See page 320

Cable gland
See page 333 ~ 340

Ventilation parts
See page 325 ~ 328

BCAR series — IP65 ABS PLASTIC BOX with OUTDOOR ROOF

NEW SIZE

BCPR series — IP65 POLYCARBONATE PLASTIC BOX with OUTDOOR ROOF

NEW SIZE

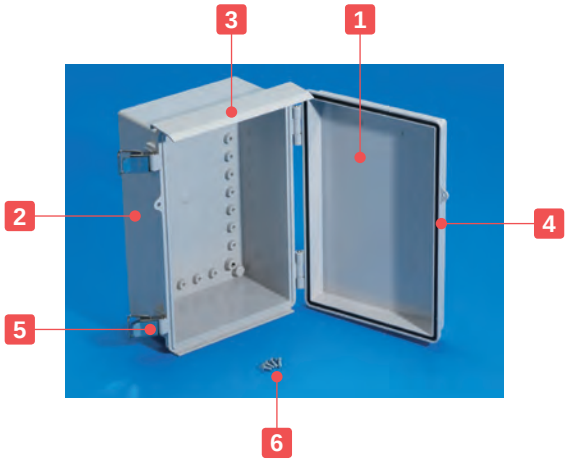

IP65

Technical Data

Protection class : IP65
Operating temperature:
BCAR -10°C ~ +60°C
BCPR -20°C ~ +75°C

- Suitable for outdoor use by equipping easy snap-on roof attachment.
- 44 different sizes available.
- Applicable for various uses in fields such as FA, network communication, power switch controls and so on.
- BCAR series is made of white gray ABS with 2 different cover types (white gray ABS and transparent polycarbonate) available.
- BCPR series is made of light gray UL94V-0 polycarbonate , which has good heat resistant properties.
- Transparent cover type is not available for BCAR507018, 507025, 608018, and 608028 models.

Components : BCAR series

No.	Part name	Pcs	Material	Color / Finish
1	Top cover	1	ABS UL94HB • Polycarbonate UL94V-0	White gray • Transparent
2	Base	1	ABS UL94HB	White gray
3	Roof	1	PVC	White gray
4	Gasket	1	Polyurethane	Black
5	Latch	1 ~ 3	Stainless steel	Unfinished
6	Screw for mounting plate	2 ~ 8	Steel	Trivalent chromate

■ Stainless steel mounting brackets are included together with the following models : 506018, 506025, 507018, 507025, 608018, and 608028.

Components : BCPR series

No.	Part name	Pcs	Material	Color / Finish
1	Top cover	1	Polycarbonate UL94V-0	Light gray
2	Base	1	Glass fiber filled polycarbonate UL94V-0	Light gray
3	Roof	1	PVC	Light gray
4	Gasket	1	Polyurethane	Black
5	Latch	1 ~ 3	Stainless steel	Unfinished
6	Screw for mounting plate	2 ~ 8	Steel	Trivalent chromate

■ Stainless steel mounting brackets are included together with the following models : 506018, 506025, 507018, 507025, 608018, and 608028.

Color Type

Color code	Top cover color / Material	Base color / Material
BCAR G	White gray / ABS	White gray / ABS
BCAR T	Transparent / Polycarbonate	White gray / ABS
BCPR S	Light gray / Polycarbonate	Light gray / Glass fiber filled polycarbonate

■ Please suffix color code at the end of the product number.

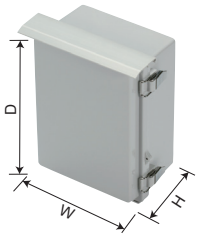

BCAR Product no. / Dimensions

Product no.	W	D	H	Weight (g)	
				G	T
BCAR091207□	90	120	70	213	220
BCAR091208□	90	120	85	228	237
BCAR101507□	100	150	70	291	300
BCAR101508□	100	150	85	309	318
BCAR112107□	110	210	75	379	398
BCAR112110□	110	210	100	442	440
BCAR112607□	110	260	75	451	466
BCAR112610□	110	260	100.5	504	519
BCAR131508□	135	155	85	379	381
BCAR131808□	135	185	85.5	404	434
BCAR131810□	135	185	100.5	420	426
BCAR162110□	160	210	100	495	513
BCAR162113□	160	210	130	544	564
BCAR162610□	160	260	100	605	629
BCAR162613□	160	260	130	701	729
NEW BCAR172210□	170	220	105	570	606
BCAR172711□	170	270	110.5	700	710
BCAR192810□	190	280	100.5	755	778
BCAR192814□	190	280	141	909	933
NEW BCAR203013□N	200	300	130	959	992
NEW BCAR203015□N	200	300	150	1,027	1,060
NEW BCAR203018□N	200	300	180	1,148	1,181
BCAR212110□	210	210	100	666	692
BCAR212113□	210	210	130	740	762
NEW BCAR253515□N	250	350	150	1,324	1,366
NEW BCAR253518□N	250	350	180	1,461	1,503
BCAR282813□	280	280	130.5	1,218	1,251
BCAR283813□	280	380	130	1,506	1,563
BCAR303015□	300	300	151	1,393	1,472
BCAR303018□	300	300	181	1,549	1,630
BCAR304012□	300	400	120	1,562	1,629
BCAR304015□	300	400	150	1,617	1,729
BCAR304018□	300	400	181	1,773	1,907
BCAR353515□	350	350	150	1,757	1,827
BCAR353518□	350	350	181	1,908	1,970
BCAR354512□	350	450	120	2,140	2,239
BCAR354516□	350	450	160	2,454	2,586
BCAR354520□	350	450	201	2,718	2,866
BCAR506018□	530	630	185	5,564	5,737
BCAR506025□	530	630	255	6,203	6,399
BCAR507018G	530	730	188	6,366	–
BCAR507025G	530	730	258	7,037	–
BCAR608018G	630	830	188	8,279	–
BCAR608028G	630	830	288	9,719	–

■ BCAR507018, 507025, 608018, and 608028 models are only available as G color type.

BCPR Product no. / Dimensions

Product no.	W	D	H	Weight (g)
BCPR091207S	90	120	70	242
BCPR091208S	90	120	85	264
BCPR101507S	100	150	70	330
BCPR101508S	100	150	85	354
BCPR112107S	110	210	75	439
BCPR112110S	110	210	100	493
BCPR112607S	110	260	75	513
BCPR112610S	110	260	100.5	589
BCPR131508S	135	155	85	429
BCPR131808S	135	185	85.5	475
BCPR131810S	135	185	100.5	471
BCPR162110S	160	210	100	583
BCPR162113S	160	210	130	638
BCPR162610S	160	260	100	699
BCPR162613S	160	260	130	806
NEW BCPR172210S	170	220	105	667
BCPR172711S	170	270	110.5	803
BCPR192810S	190	280	100.5	889
BCPR192814S	190	280	141	1,060
NEW BCPR203013SN	200	300	130	1,108
NEW BCPR203015SN	200	300	150	1,188
NEW BCPR203018SN	200	300	180	1,333
BCPR212110S	210	210	100	777
BCPR212113S	210	210	130	862
NEW BCPR253515SN	250	350	150	1,531
NEW BCPR253518SN	250	350	150	1,694
BCPR282813S	280	280	130.5	1,422
BCPR283813S	280	380	130	1,747
BCPR303015S	300	300	151	1,665
BCPR303018S	300	300	181	1,814
BCPR304012S	300	400	120	1,901
BCPR304015S	300	400	150	1,917
BCPR304018S	300	400	181	2,084
BCPR353515S	350	350	150	2,109
BCPR353518S	350	350	181	2,206
BCPR354512S	350	450	120	2,471
BCPR354516S	350	450	160	2,899
BCPR354520S	350	450	201	3,224
BCPR506018S	530	630	185	6,431
BCPR506025S	530	630	255	7,339
BCPR507018S	530	730	188	7,630
BCPR507025S	530	730	258	8,420
BCPR608018S	630	830	188	10,040
BCPR608028S	630	830	288	11,770

■ Refer to page 311 ~ 314 for detailed dimensions.

Accessories (Optional parts)

Mounting plate BMP series
See page 317 ~ 319

Mounting bracket CK • BFL series
See page 320

Pole mounting bracket SSK series
See page 321 ~ 322

Cable gland
See page 333 ~ 340

Ventilation parts
See page 325 ~ 328

BCAP • BCPC • BCPK • BCAR • BCPR dimensions

■ DXF/DWG/PDF drawings available on our website.

091207 • 091208

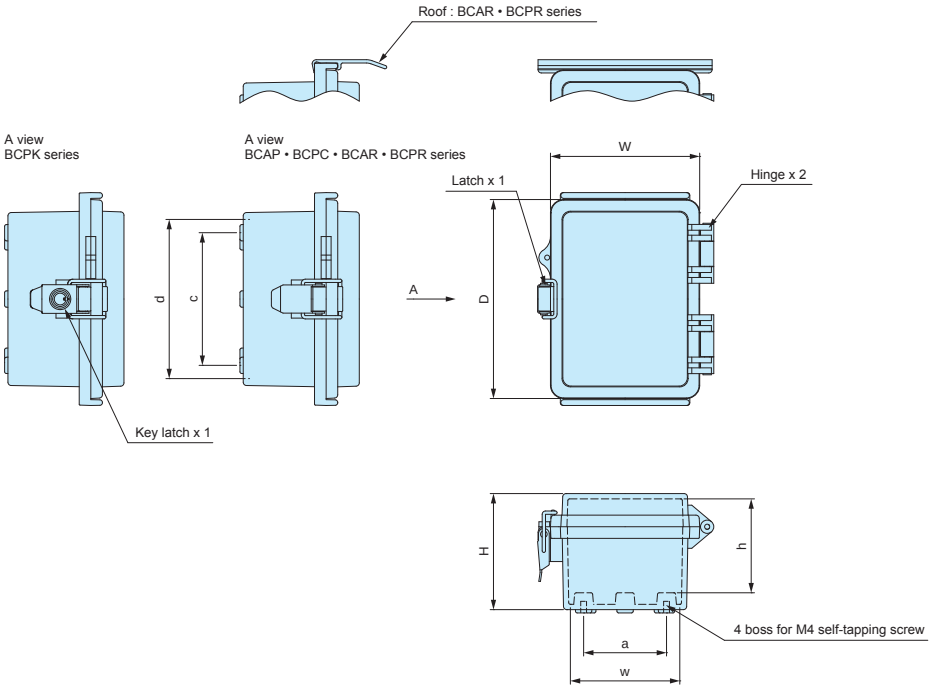

■ K = BCPK series, R = BCAR • BCPR series.

Product no.	W	D	H	Available range			Bottom hole pitch	
				w	d	h	a	c
BCAP • R, BCPC • K • R091207	90	120	70	66	96	56.5	50	80
BCAP • R, BCPC • K • R091208	90	120	85	66	96	71.5	50	80

101507 ~ 405020

※ Not available for BCAR • BCPR 151509, 151512, 405016, and 405020 models.

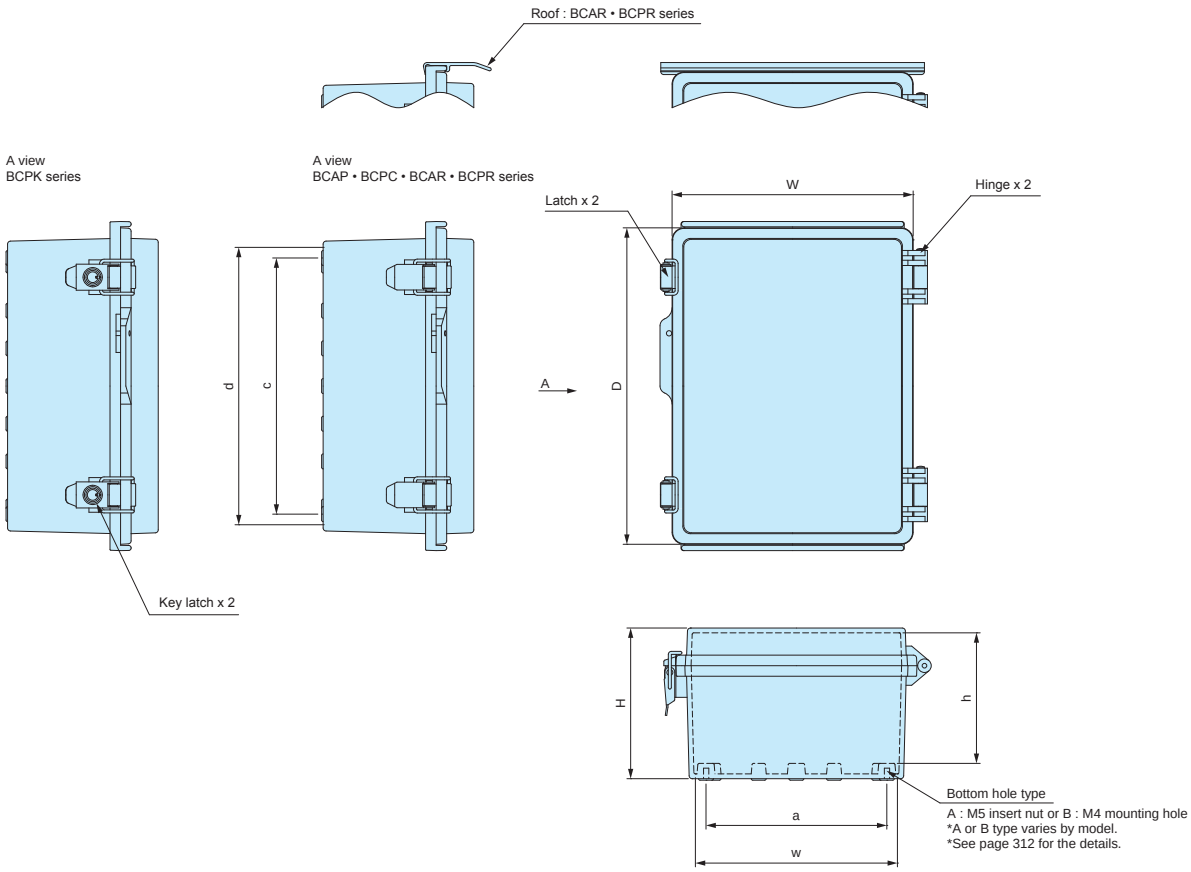

■ Number of bosses inside vary according to box size.
Refer to DXF/DWG/PDF drawings for more details.

APPLICATION EXAMPLE

Surveillance Video Data Cloud Router

Product by LIVELOCK TECHNOLOGIES (Japan)

■ K = BCPK series, R = BCAR • BCPR series.

Product no.	W	D	H	Available range			Bottom hole pitch		Bottom hole type
				w	d	h	a	c	
BCAP • R, BCPC • K • R101507	100	150	70	76	126	56.5	60	110	B
BCAP • R, BCPC • K • R101508	100	150	85	75.5	125.5	71.5	60	110	B
BCAP • R, BCPC • K • R112107	110	210	75	85.8	185.8	61.5	70	170	B
BCAP • R, BCPC • K • R112110	110	210	100	84.9	184.9	86.5	70	170	B
BCAP • R, BCPC • K • R112607	110	260	75	85.8	235.8	61.5	70	220	B
BCAP • R, BCPC • K • R112610	110	260	100.5	85.1	234.9	87.2	70	220	B
BCAP • R, BCPC • K • R131508	135	155	85	110.5	130.5	71.5	95	115	B
BCAP • R, BCPC • K • R131808	135	185	85.5	110.4	160.4	72.2	95	145	B
BCAP • R, BCPC • K • R131810	135	185	100.5	110.4	160.4	87.1	95	145	B
BCAP, BCPC • K 151509	150	150	90	125.7	125.7	75.5	120	120	B
BCAP, BCPC • K 151512	150	150	120.5	124	124	106	117	117	B
BCAP • R, BCPC • K • R162110	160	210	100	134	184	86.6	120	170	B
BCAP • R, BCPC • K • R162113	160	210	130	134	184	116.5	120	170	B
BCAP • R, BCPC • K • R162610	160	260	100	135.1	235.1	86.6	120	220	B
BCAP • R, BCPC • K • R162613	160	260	130	134	234	116.6	120	220	B
BCAP • R, BCPC • K • R172210	170	220	105	144.9	194.9	90.8	132	182	B
BCAP • R, BCPC • K • R172711	170	270	110.5	144.9	244.9	96.1	132	232	B
BCAP • R, BCPC • K • R192810	190	280	100.5	165.3	255.3	84.1	148	238	A
BCAP • R, BCPC • K • R192814	190	280	141	164.2	254.2	124.6	148	238	A
BCPK 203013	200	300	130	173.5	273.6	113.6	152	252	A
BCAP • R, BCPC • R203013□N	200	300	130	173.2	273.2	114	152	252	A
BCAP • R, BCPC • K • R203015□N	200	300	150	173.5	273.5	133.8	152	252	A
BCAP • R, BCPC • K • R203018□N	200	300	180	172.5	272.5	163.8	152	252	A
BCAP • R, BCPC • K • R212110	210	210	100	185.1	185.1	86.6	170	170	B
BCAP • R, BCPC • K • R212113	210	210	130	184	184	116.6	170	170	B
BCPK 253515	250	350	150	222.5	322.5	135.3	206	306	A
BCAP • R, BCPC • R253515□N	250	350	150	222.1	322.3	134	206	306	A
BCAP • R, BCPC • K • R253518□N	250	350	180	222.5	322.5	163.8	206	306	A
BCAP • R, BCPC • K • R282813	280	280	130.5	254	254	113.6	238	238	A
BCAP • R, BCPC • K • R283813	280	380	130	254	354	113.6	238	338	A
BCAP • R, BCPC • K • R303015	300	300	151	273	273	134.3	256	256	A
BCAP • R, BCPC • K • R303018	300	300	181	272.5	272.5	164.3	256	256	A
BCAP • R, BCPC • K • R304012	300	400	120	274.5	374.5	103.6	252	352	A
BCAP • R, BCPC • K • R304015	300	400	150	273.5	373.5	133.6	252	352	A
BCAP • R, BCPC • K • R304018	300	400	181	272.5	372.5	164.6	252	352	A
BCAP • R, BCPC • K • R353515	350	350	150	323.6	323.6	133.6	302	302	A
BCAP • R, BCPC • K • R353518	350	350	181	322.5	322.5	164.6	302	302	A
BCAP • R, BCPC • K • R354512	350	450	120	316.7	416.7	103.3	302	402	A
BCAP • R, BCPC • K • R354516	350	450	160	308.7	414.7	142.6	302	402	A
BCAP • R, BCPC • K • R354520	350	450	201	309.3	414.8	183.6	302	402	A
BCAP, BCPC • K 405016	400	500	160	360.4	466.6	144	352	452	A
BCAP, BCPC • K 405020	400	500	201	359.4	465.5	184	352.5	452.5	A

BCAP • BCPC • BCPK • BCAR • BCPR dimensions.

■ DXF/DWG/PDF drawings available on our website.

406018 ~ 507025

※ Not available for BCAR • BCPR 406018 and 406023 models.

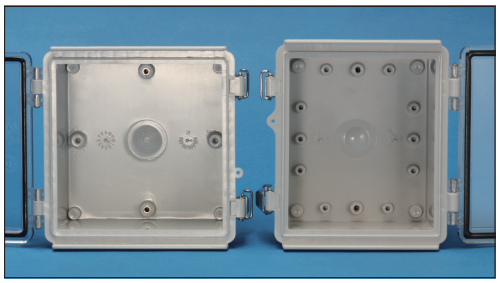

■ Number of bosses inside vary according to box size.
Refer to DXF/DWG/PDF drawings for more details.

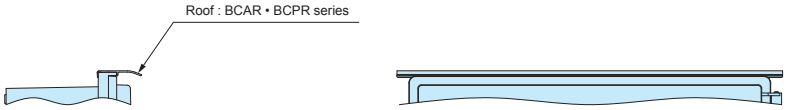

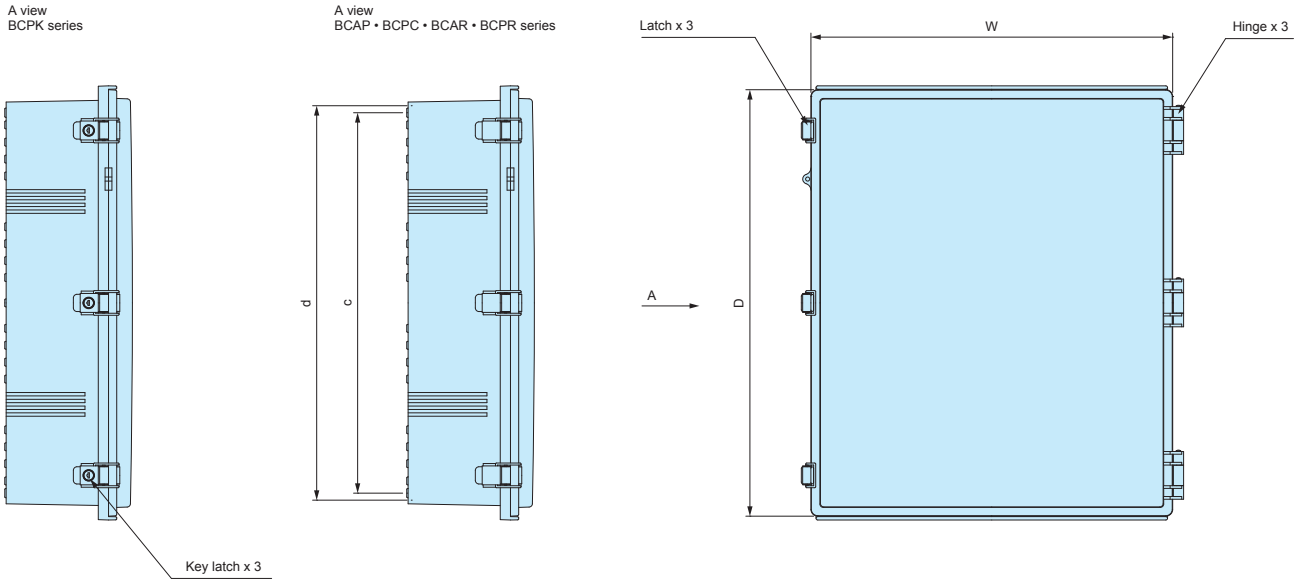

Attention when locking the latch

1. Close latches on both ends first.
2. Close center latch next.

※ Closing center latch first may cause a non-watertight seal.

Center latch must be closed last!

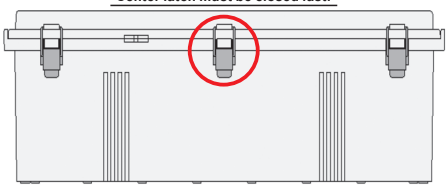

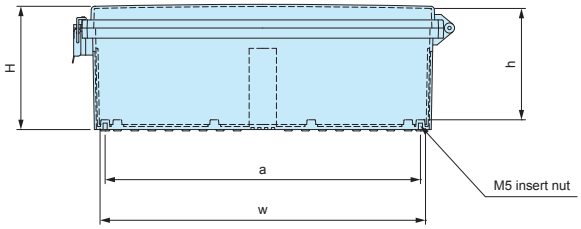

■ K = BCPK series, R = BCAR • BCPR series.

Product no.	W	D	H	Available range			Bottom hole pitch	
				w	d	h	a	c
BCAP, BCPC • K 406018	400	600	181	358.6	565.9	163.8	352.5	552.5
BCAP, BCPC • K 406023	400	600	231	356.9	564.1	213.8	352	552.5
BCAP, R, BCPC • K • R506018	530	630	185	476.8	576.8	163.6	462	562
BCAP, R, BCPC • K • R506025	530	630	255	474.6	574.6	233.6	462	562
BCAP, R, BCPC • K • R507018	530	730	188	477	677	166.1	462	662
BCAP, R, BCPC • K • R507025	530	730	258	475	676.2	236	462	662

608018, 608028

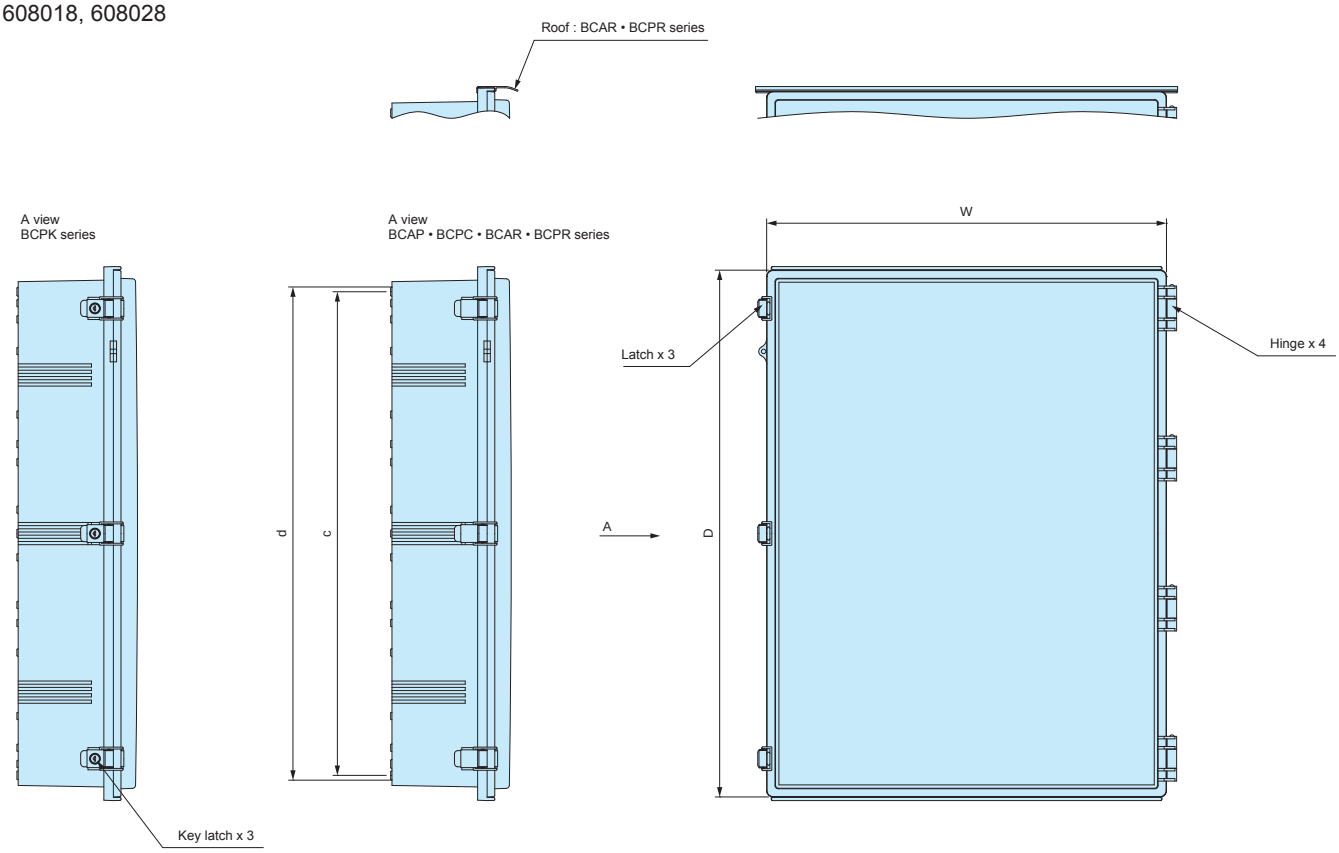

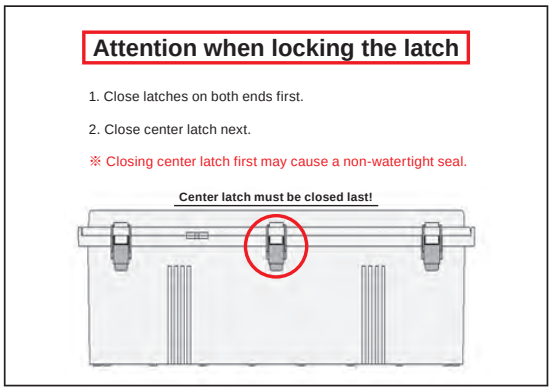

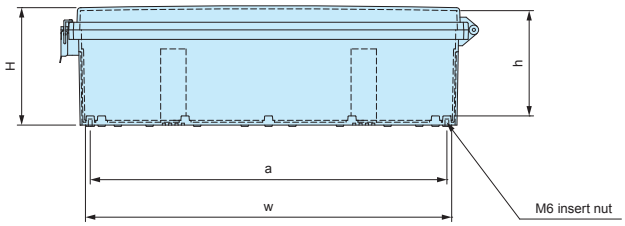

■ K = BCPK series, R = BCAR • BCPR series.

Product no.	W	D	H	Available range			Bottom hole pitch	
				w	d	h	a	c
BCAP • R, BCPC • K • R608018	630	830	188	575	777	165.6	562	762
BCAP • R, BCPC • K • R608028	630	830	288	573.5	773.5	265.8	562	762

Included stainless steel mounting bracket for 506018, 506025, 507018, 507025, 608018, and 608028

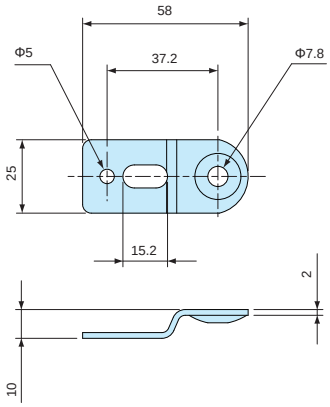

Components

Part name	Pcs	Material	Finish
Mounting bracket	6	Stainless steel	Unfinished
Screw	6	Steel	Trivalent chromate

BRF series OUTDOOR ROOF

NEW SIZE

- Recommended to be used for outdoor environments for protection against rain etc.
- Snap-in easy installation.
- Available for use with BCAP, BCPC, and BCPK series' models except 151509, 151512, 405016, 405020, 406018, and 406023 models.

Color Type

Color code	Material	Color / Finish	Suitable models
G	PVC	White gray	BCAP
S	PVC	Light gray	BCPC • BCPK

BRF dimensions

- DXF/DWG/PDF drawings available on our website.

Roof for 091207 ~ 353518

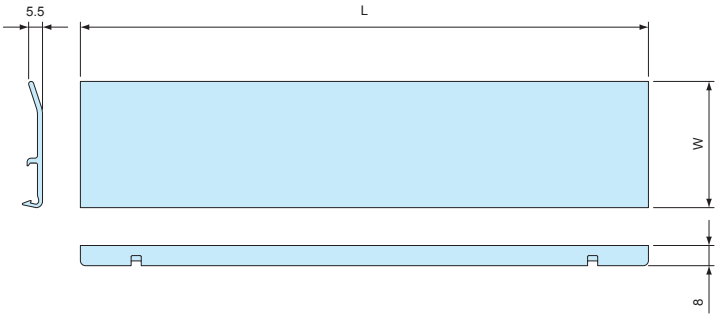

Product no. / Dimensions

- Please suffix the color code at the end of the product number.

Product no.	Suitable models	L	W
BRF- 90□	BCAP • BCPC • BCPK 091207 091208	105	45
BRF-100□	BCAP • BCPC • BCPK 101507 101508	115	45
BRF-110□	BCAP • BCPC • BCPK 112107 112110 112607 112610	125	45
BRF-135□	BCAP • BCPC • BCPK 131508 131808 131810	150	45
BRF-160□	BCAP • BCPC • BCPK 162110 162113 162610 162613	175	45
BRF-170□	BCAP • BCPC • BCPK 172711	185	45
NEW BRF-1722□	BCAP • BCPC • BCPK 172210	180	45
BRF-190□	BCAP • BCPC • BCPK 192810 192814	205	45
BRF-210□	BCAP • BCPC • BCPK 212110 212113	225	45
BRF-200□	BCAP • BCPC • BCPK 203013 203015 203018	225	50
NEW BRF-200□N	BCAP • BCPC • BCPK 203013□N 203015□N 203018□N	225	50
BRF-250□	BCAP • BCPC • BCPK 253515 253518	275	50
NEW BRF-250□N	BCAP • BCPC • BCPK 253515□N 253518□N	275	50
BRF-280□	BCAP • BCPC • BCPK 282813 283813	305	50
BRF-300□	BCAP • BCPC • BCPK 303015 303018 304012 304015 304018	325	50
BRF-350□	BCAP • BCPC • BCPK 353515 353518	375	50

Roof for 354512 ~ 354520

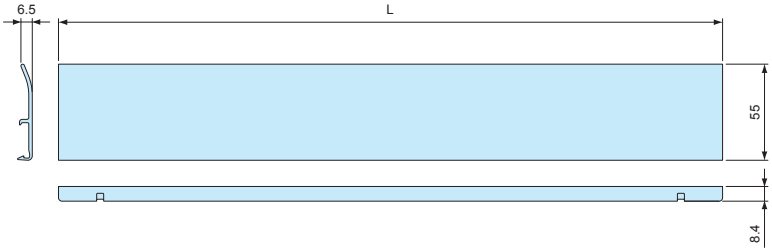

Product no. / Dimensions

- Please suffix the color code at the end of the product number.

Product no.	Suitable models	L
BRF-350L□	BCAP • BCPC • BCPK 354512 354516 354520	380

- S color type is light gray painted.

Roof for 506018 ~ 608028

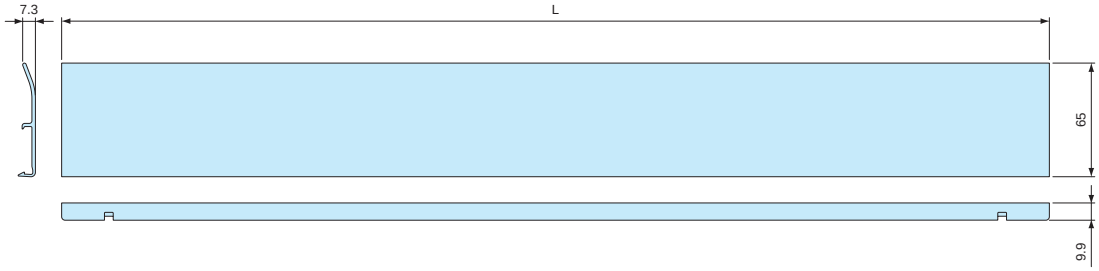

Product no. / Dimensions

■ Please suffix the color code at the end of the product number.

Product no.	Suitable models	L
BRF-530□	BCAP • BCPC • BCPK 506018 506025 507018 507025	565
BRF-630□	BCAP • BCPC • BCPK 608018 608028	665

■ S color type is light gray painted.

■ How to install BRF outdoor roof

Refer to illustration.

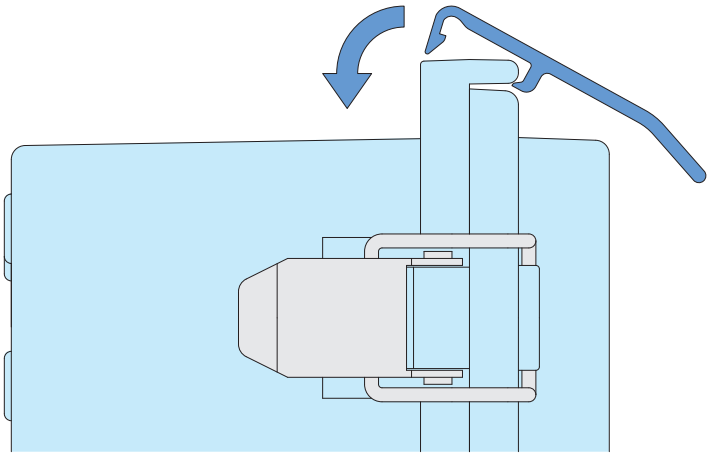

BCC-1 DUST PROTECTION CAP

■ Prevent dust and other foreign material entry.

■ Protection against corrosion on key hole part in environments such as coastal areas.

■ When ordering, please ensure that the quantity required corresponds to the number of latches on your selected model.

Product no. / Dimensions

Product no.	Material	Color	Pack of
BCC-1	Silicone	Black	1

Suitable models

Suitable models	Required
BCPK192810 ~ 203018, 253515 ~ 405020	2
BCPK406018 ~ 608028	3

■ Not suitable for BCPK 212110, 212113, 172711 and smaller models.

BMP-Z series STEEL MOUNTING PLATE

- Customization services (machining, punch press or clinching nut insertion) are available. See website for more details.
- Tough but easily customizable.
- Large sized (BMP5060Z, 5070Z, and 6080Z) plates have a 90° bent edge.

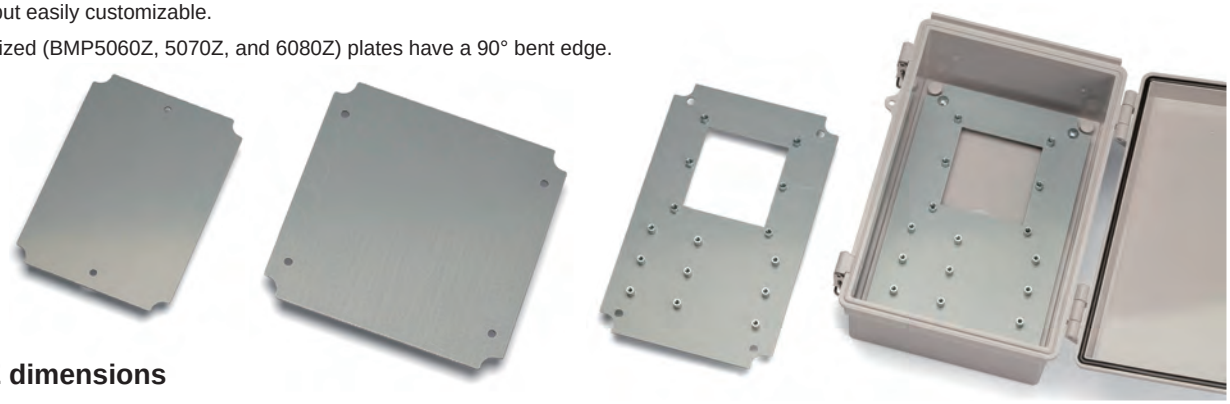

BMP-Z dimensions

BMP0912Z ~ 1727Z

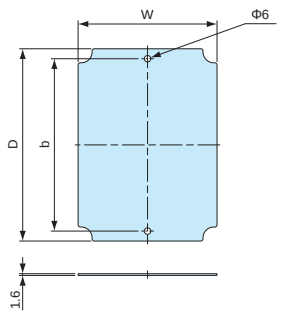

BMP1928Z ~ 4060Z

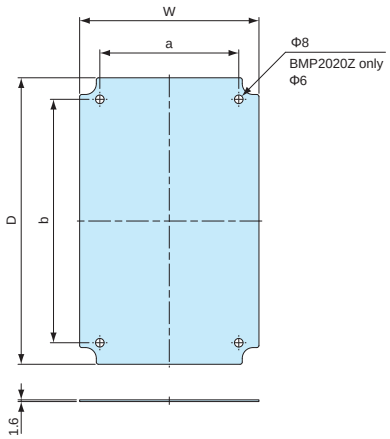

BMP5060Z ~ 6080Z

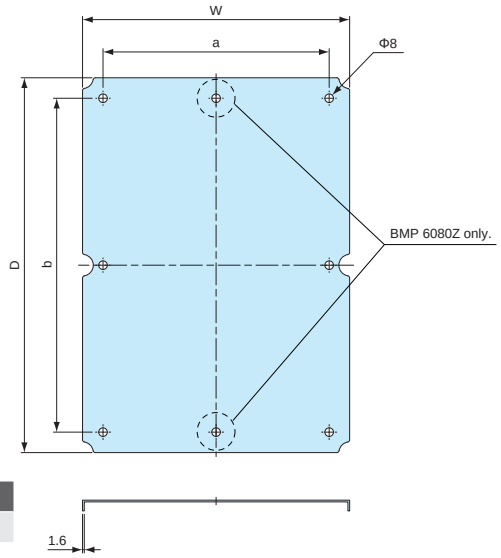

Components

Part name	Material	Finish
Mounting plate	Steel SECC t = 1.6	Zinc coated

- DXF/DWG/PDF drawings available on our website.

Product no. / Dimensions

Product no.	W	D	a	b	Suitable models	Weight (g)
BMP0912Z	58	88	–	69	BCAP • R, BCPC • K • R 091207, 091208	53
BMP0813Z	68	118	–	100	BCAP • R, BCPC • K • R 101507, 101508	87
BMP1121Z	77	177	–	158	BCAP • R, BCPC • K • R 112107, 112110	159
BMP1126Z	77	227	–	208	BCAP • R, BCPC • K • R 112607, 112610	210
BMP1315Z	102	122	–	110	BCAP • R, BCPC • K • R 131508	141
BMP1217Z	102	152	–	140	BCAP • R, BCPC • K • R 131808, 131810	180
BMP1515Z	121	121	–	110	BCAP BCPC • K 151509, 151512	172
BMP1520Z	126	176	–	160	BCAP • R, BCPC • K • R 162110, 162113	262
BMP1525Z	127	227	–	210	BCAP • R, BCPC • K • R 162610, 162613	346
BMP1722Z	137	187	–	160	BCAP • R, BCPC • K • R 172210	308
BMP1727Z	137	237	–	210	BCAP • R, BCPC • K • R 172711	391
BMP1928Z	157	247	120	210	BCAP • R, BCPC • K • R 192810, 192814	462.5
BMP2020Z	176	176	120	150	BCAP • R, BCPC • K • R 212110, 212113	371
BMP2030Z	165	265	129	226	BCAP • R, BCPC • K • R 203013, 203015, 203018	519
BMP2535Z	215	315	180	270	BCAP • R, BCPC • K • R 253515, 253518	816
BMP2828Z	246	246	210	210	BCAP • R, BCPC • K • R 282813	727.5
BMP2838Z	246	346	210	310	BCAP • R, BCPC • K • R 283813	1,018
BMP3030Z	264	264	219	219	BCAP • R, BCPC • K • R 303015, 303018	826.5
BMP3040Z	265	365	228	325	BCAP • R, BCPC • K • R 304012, 304015, 304018	1,154
BMP3535Z	315	315	270	270	BCAP • R, BCPC • K • R 353515, 353518	1,196.5
BMP3545Z	301	401	274	365	BCAP • R, BCPC • K • R 354512, 354516, 354520	1,443
BMP4050Z	354	454	328	428	BCAP BCPC • K 405016, 405020	1,998
BMP4060Z	354	551	328	525	BCAP BCPC • K 406018, 406023	2,328
BMP5060Z	474	574	426	526	BCAP • R, BCPC • K • R 506018, 506025	3,286
BMP5070Z	472	672	426	626	BCAP • R, BCPC • K • R 507018, 507025	3,864
BMP6080Z	565	765	526	726	BCAP • R, BCPC • K • R 608018, 608028	5,288.5

- K = BCPK series, R = BCAR • BCPR series.

TAKACHI ELECTRONICS ENCLOSURE CO., LTD.
3-21-16 Higashi-ryoke, Kawaguchi-shi, Saitama, 332-0003 JAPAN
Tel. +81-48-222-5409 / Fax. +81-48-222-7652

November 11, 2019

Notice
BMP-P series Plastic Mounting Plate
Changes to Underside (bottom) Shape

■ Affected models

Product Number	Status
BMP0811P	Pending (est. 2nd Quarter 2020)
BMP0818P	Pending (est. 2nd Quarter 2020)
BMP1126P	Pending (est. 3rd Quarter 2020)
BMP1212P	Pending (est. 2nd Quarter 2020)
BMP1217P	Changed

■ Changes : Underside shape/construction

Current shape

New shape

■ Purpose : For the reinforcement and strengthening of small-sized plastic mounting plate(s).

■ Effective date : Once present stock has run out.
■ Note : There will be no changes to product number, color, or pricing.

BMP-P series PLASTIC MOUNTING PLATE

■ Light weight ABS plastic mounting plate.

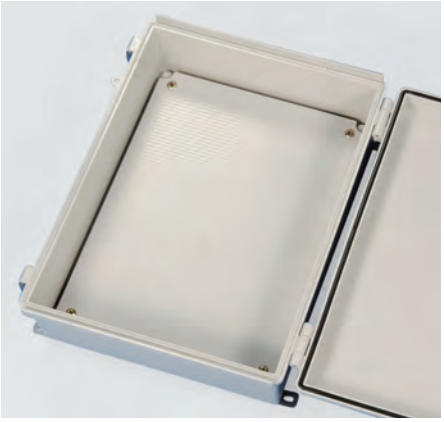

BMP-P dimensions

BMP0811P

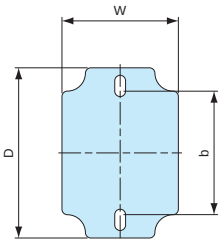

BMP0813P ~ 1515P

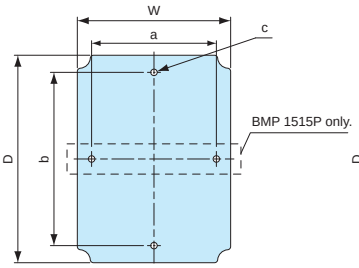

BMP1520P, 1525P

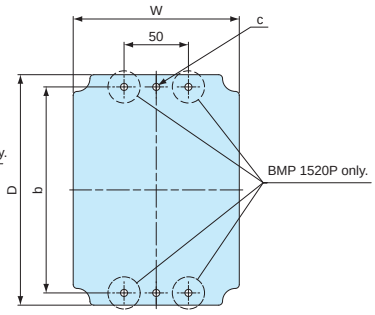

BMP1928P ~ 4050P

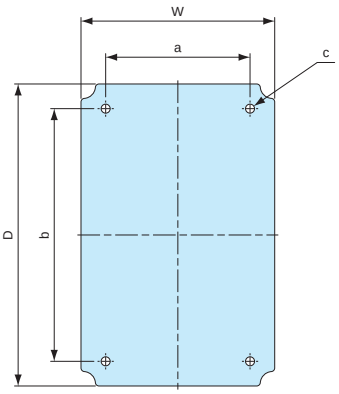

■ DXF/DWG/PDF drawings available on our website.

Components

Part name	Material	Color
Mounting plate	ABS	White gray

Product no. / Dimensions

Product no.	W	D	a	b	c (Φ)	Thickness	Suitable models	Weight (g)
BMP0811P	64.5	94.3	–	68.4	–	3.5	BCAP • R, BCPC • K • R 091207, 091208	21
BMP0813P	64.6	114.5	–	88.4	–	3.5	BCAP • R, BCPC • K • R 101507, 101508	24
BMP1121P	76.5	176	–	158	6	3	BCAP • R, BCPC • K • R 112107, 112110	40
BMP1126P	76.5	226	–	208	6	3	BCAP • R, BCPC • K • R 112607, 112610	53
BMP1315P	101.5	121.5	–	110	5.5	3.5	BCAP • R, BCPC • K • R 131508	36
BMP1217P	110	160	–	140	6	3.5	BCAP • R, BCPC • K • R 131808, 131810	62
BMP1515P	123	123	110	110	6	3.5	BCAP BCPC • K 151509, 151512	52
BMP1520P	129	179	–	160	5.5	3.5	BCAP • R, BCPC • K • R 162110, 162113, 172210	92
BMP1525P	129	228.5	–	210	6	3.5	BCAP • R, BCPC • K • R 162610, 162613, 172711	112
BMP1928P	158.5	248	120	210	8	3.5	BCAP • R, BCPC • K • R 192810, 192814	162
BMP2020P	178.5	178.5	120	150	5.5	3.5	BCAP • R, BCPC • K • R 212110, 212113	125
BMP2030P	166.5	266	128	225.5	8	4	BCAP • R, BCPC • K • R 203013, 203015, 203018	188
BMP2535P	215.5	315	180	268.5	8	4	BCAP • R, BCPC • K • R 253515, 253518	292
BMP2828P	248.5	248.5	210	210	8	4	BCAP • R, BCPC • K • R 282813	237
BMP2838P	248	347.5	209	309.5	8	4	BCAP • R, BCPC • K • R 283813	368
BMP3030P	262.5	262.5	219	219	7.5	4	BCAP • R, BCPC • K • R 303015, 303018	281
BMP3040P	264	364	228	324	7	3.7	BCAP • R, BCPC • K • R 304012, 304015, 304018	437
BMP3535P	313.5	313.5	269.5	269.5	8	4	BCAP • R, BCPC • K • R 353515, 353518	424.5
BMP3545P	305	405.5	273	364	8	4	BCAP • R, BCPC • K • R 354512, 354516, 354520	539
BMP4050P	357	457	328	428	8.5	4	BCAP BCPC • K 405016, 405020	725.5

■ K = BCPK series, R = BCAR • BCPR series.

BMP-W series WOODEN MOUNTING PLATE

- Easy installation with self-tapping screws.
- Easily customizable hard wooden plate.
- Plate comes with scales printed on for easy references.

BMP-W dimensions

BMP0912W ~ 1727W

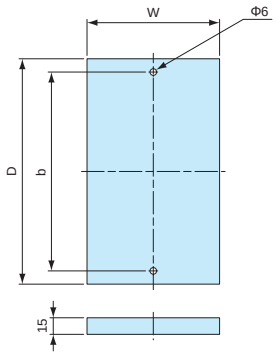

BMP1928W ~ 4060W

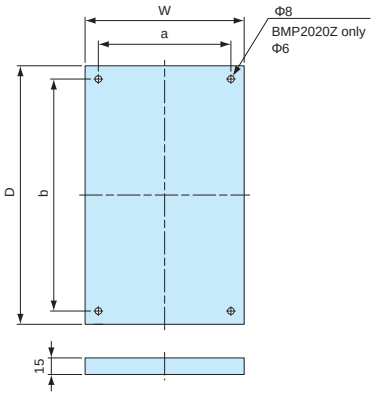

BMP5060W ~ 6080W

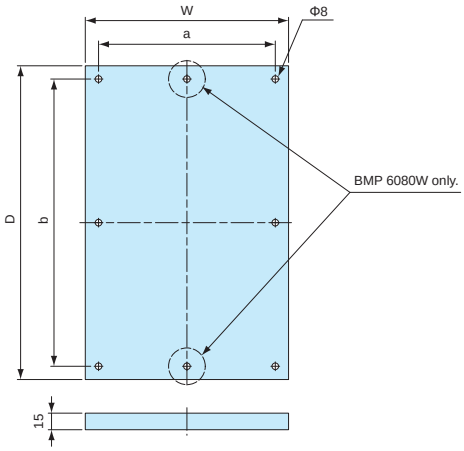

- DXF/DWG/PDF drawings available on our website.

Components

Part name	Pcs	Material	Color / Finish
Mounting plate	1	Wood board t=15	Scaled sheet
Self-tapping screw pan washer head	2 ~ 8	Steel	Trivalent chromate

Product no. / Dimensions

Product no.	W	D	a	b	Suitable models	Screw	Weight (g)
BMP0912W	58	92	–	69	BCAP • R, BCPC • K • R 091207, 091208	M4×20 2 pcs	62
BMP0813W	68	122	–	99	BCAP • R, BCPC • K • R 101507, 101508	M4×20 2 pcs	94
BMP1121W	77	181	–	158	BCAP • R, BCPC • K • R 112107, 112110	M4×20 2 pcs	166
BMP1126W	77	231	–	208	BCAP • R, BCPC • K • R 112607, 112610	M4×20 2 pcs	191
BMP1315W	102	126	–	110	BCAP • R, BCPC • K • R 131508	M4×20 2 pcs	127
BMP1217W	102	156	–	140	BCAP • R, BCPC • K • R 131808, 131810	M4×20 2 pcs	190
BMP1515W	118	125	–	110	BCAP BCPC • K 151509, 151512	M4×20 2 pcs	172
BMP1520W	126	180	–	160	BCAP • R, BCPC • K • R 162110, 162113	M4×20 2 pcs	243
BMP1525W	127	231	–	210	BCAP • R, BCPC • K • R 162610, 162613	M4×20 2 pcs	352
BMP1722W	137	191	–	160	BCAP • R, BCPC • K • R 172210	M4×20 2 pcs	286
BMP1727W	137	241	–	210	BCAP • R, BCPC • K • R 172711	M4×20 2 pcs	212
BMP1928W	150	240	120	210	BCAP • R, BCPC • K • R 192810, 192814	M5×20 4 pcs	350
BMP2020W	170	174	120	150	BCAP • R, BCPC • K • R 212110, 212113	M4×20 4 pcs	336
BMP2030W	159	256	129	226	BCAP • R, BCPC • K • R 203013, 203015, 203018	M5×20 4 pcs	482
BMP2535W	210	300	180	270	BCAP • R, BCPC • K • R 253515, 253518	M5×20 4 pcs	688
BMP2828W	240	240	210	210	BCAP • R, BCPC • K • R 282813	M5×20 4 pcs	565
BMP2838W	240	340	210	310	BCAP • R, BCPC • K • R 283813	M5×20 4 pcs	893
BMP3030W	249	249	219	219	BCAP • R, BCPC • K • R 303015, 303018	M5×20 4 pcs	659
BMP3040W	258	355	228	324	BCAP • R, BCPC • K • R 304012, 304015, 304018	M5×20 4 pcs	965
BMP3535W	300	300	270	270	BCAP • R, BCPC • K • R 353515, 353518	M5×20 4 pcs	964
BMP3545W	301	395	274	365	BCAP • R, BCPC • K • R 354512, 354516, 354520	M5×20 4 pcs	1,314
BMP4050W	355	455	328	428	BCAP BCPC • K 405016, 405020	M5×20 4 pcs	1,754
BMP4060W	355	552	328	525	BCAP BCPC • K 406018, 406023	M5×20 4 pcs	2,015.5
BMP5060W	455	556	426	526	BCAP • R, BCPC • K • R 506018, 506025	M5×20 6 pcs	2,650
BMP5070W	455	656	426	626	BCAP • R, BCPC • K • R 507018, 507025	M5×20 6 pcs	3,152.5
BMP6080W	556	756	526	726	BCAP • R, BCPC • K • R 608018, 608028	M6×20 8 pcs	4,434

- K = BCPK series, R = BCAR • BCPR series.

BFL series PLASTIC MOUNTING PLATE

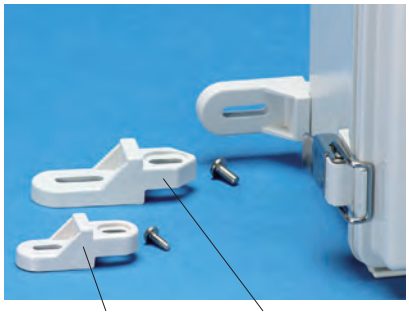

Color G Color S

- 2 different colored types to match box colors
- Tough and strong glass fiber filled polycarbonate.

BFL dimensions

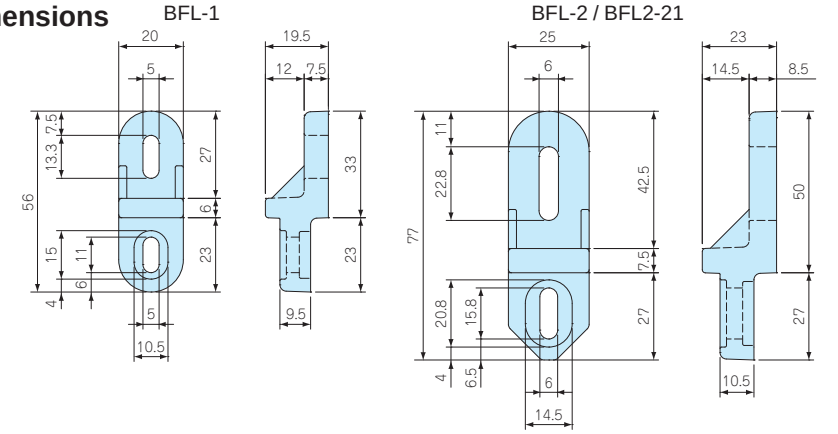

Color Type

Code	Color	Suitable models
G	White gray	BCAP • BCAR
S	Light gray	BCPC • BCPK • BCPR

Components

- DXF/DWG/PDF drawings available on our website.

Part name	Pcs	Material / Finish
Mounting bracket	4	Glass fiber filled polycarbonate
Screw	4	Stainless steel / Unfinished

Product no. / Dimensions

Product no.	Suitable models	Screw
BFL-1□	BCAP • R, BCPC • K • R 0912, 1015, 1121, 1126, 1315, 1318, 1621, 1626, 1722, 1727, 212113	Self-tapping M4-12 bind head
BFL-2□	BCAP • R, BCPC • K • R 1928, 2030, 2535, 2828, 2838, 3030, 3040, 3535, 3545, 4050, 4060, 5060	M5-12 bind head
BFL-2-21□	BCAP • R, BCPC • K • R 212110	Self-tapping M4-12 bind head

- Please suffix color code at the end of the product number.

*Not suitable for BCAP1515 models. Use CK-35P (Stainless steel) instead.

CK series STAINLESS STEEL MOUNTING BRACKET

CK dimensions

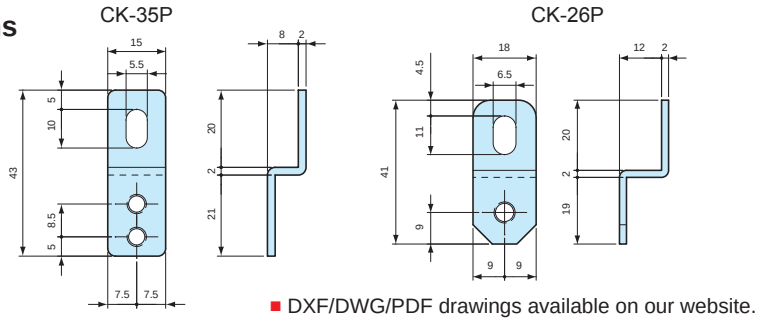

- DXF/DWG/PDF drawings available on our website.

Components

Part name	Pcs	Material	Finish
Mounting bracket	4	Stainless steel SUS304	Barrel finish
Screw	4	Stainless steel	Unfinished

Product no. / Dimensions

Product no.	Suitable models	Screw
CK-35P	BCAP • R, BCPC • K • R 0912, 1015, 1121, 1126, 1315, 1318, 1515, 1621, 1626, 1722, 1727, 2121	Self-tapping M4-10 pan head
CK-26P	BCAP • R, BCPC • K • R 1928, 2030, 2535, 2828, 2838, 3030, 3040, 3535, 3545, 4050, 4060	M5-10 pan head

MT series PCB MOUNTING SCREW

- PCB mounting screws for inner bosses of BCAP • BCAR • BCPC • BCPK • BCPR series.

Product no. / Dimensions

Product no.	Screw details	Material	Finish	Pack of
MT4-8T	Self-tapping M4-8 bind head	Steel	Trivalent chromate	20
MT5-8T	Self-tapping M5-8 bind head	Steel	Trivalent chromate	20

Product no. / Dimensions

Product no.	Suitable models	Recommended torque
MT4-8T	BCAP • R, BCPC • K • R 0912, 1015, 1121, 1126, 1315, 1318, 1515, 1621, 1626, 1722, 1727, 1928, 2121	0.7N • m
MT5-8T	BCAP • R, BCPC • K • R 2030, 2535, 2828, 2838, 3030, 3040, 3535, 3545, 4050, 4060, 5060, 5070, 6080	1.4N • m

SSK series POLE MOUNTING BRACKET for BCAP • BCAR • BCPC • BCPK • BCPR

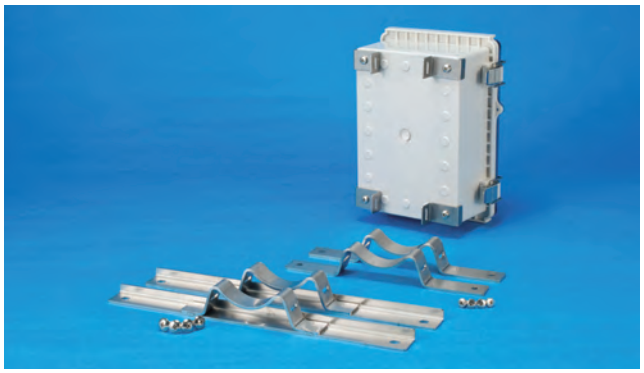

- Stainless steel pole mounting bracket for BCAP • BCAR • BCPC • BCPK • BCPR series.
- No hole milling is required for maintaining the IP rating of the boxes.
- SSK-P models come with plastic brackets.

SSK dimensions

- DXF/DWG/PDF drawings available on our website.

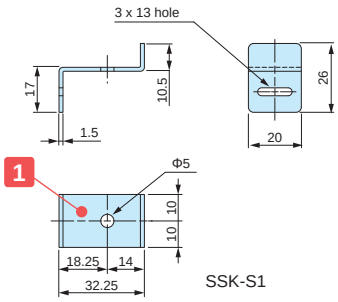

SSK-S1

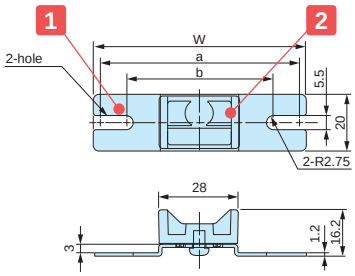

SSK-P60 • 75 • 80

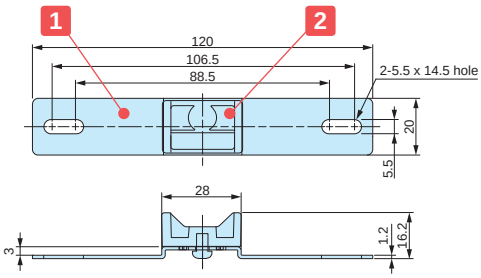

SSK-P120

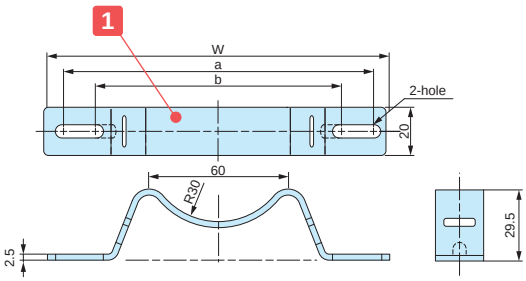

SSK-160 ~ 250

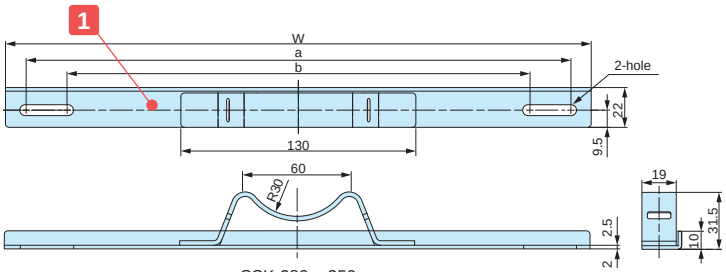

SSK-280 ~ 350

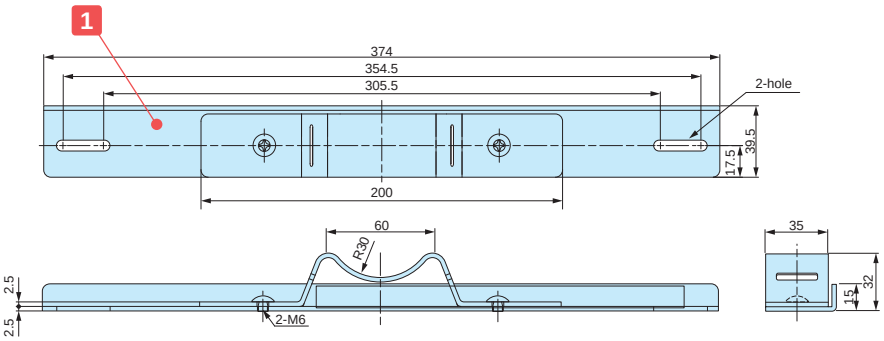

SSK-400

APPLICATION EXAMPLE

Weather Station Data Logger

Product by Sakaki (Japan)

Water Level Detector

Product by Aspect System (Japan)

Accessories (Optional parts)

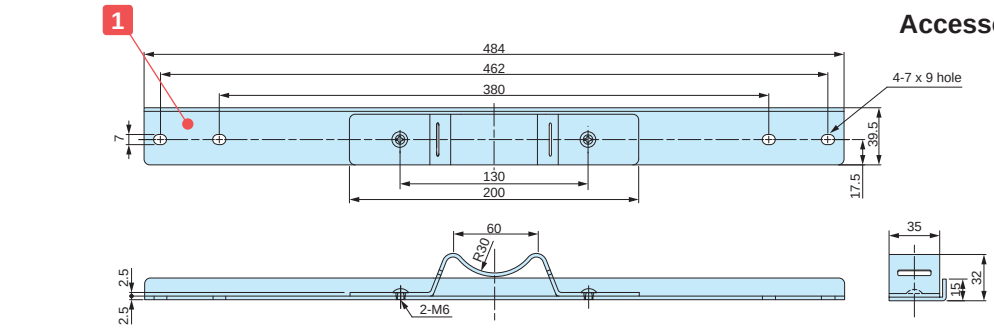

SSK-530

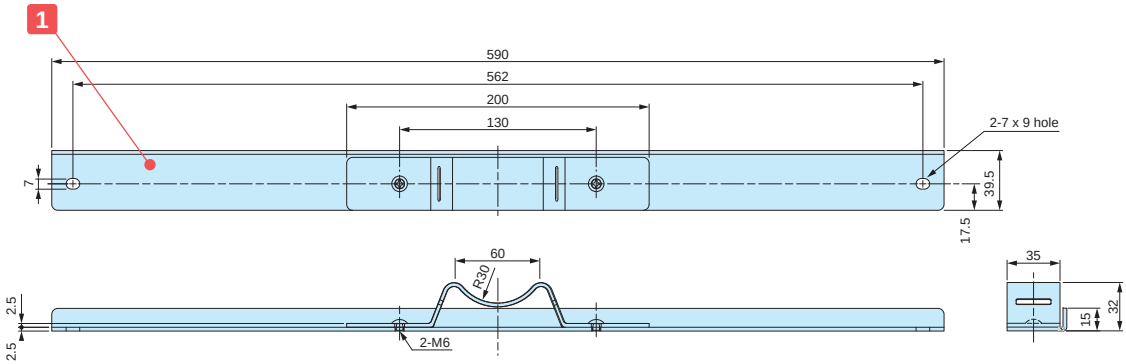

SSK-630

■ DXF/DWG/PDF drawings available on our website.

Components

No.	Part name	Pcs	Material	Color / Finish
1	Mounting bracket	2 / 4	Stainless steel SUS304	Barrel finish
2	Plastic bracket (SSK-P only)	2	ASA UL94HB	White gray
–	Screw	4	Stainless steel	Unfinished

Product no. / Dimensions

Product no.	W	a	b	Suitable models BCAP • BCAR • BCPC • BCPK • BCPR	Belt to use with	Pack of
SSK-S1	32.25	18.25	14	0912, 1015, 1121, 1126, 1315, 1318, 1621, 1626, 1722, 1727, 2121	PKB10PM, 10P, PKB10S, SNB series	4
SSK-P60	60	54.5	47.5	0912	PKB10PM, 10P, PKB10S	2
SSK-P75	75	69.5	55.5	1015	PKB10PM, 10P, PKB10S	2
SSK-P80	80	74.5	64.5	1121, 1126	PKB10PM, 10P, PKB10S	2
SSK-P120	120	106.5	88.5	1315, 1318	PKB10PM, 10P, PKB10S	2
SSK-160	142	129.5	106.5	1515, 1621, 1626	PKB10PM, 10P, PKB10S, SNB series	2
SSK-170	152	142.3	101	1722, 1727	PKB10PM, 10P, PKB10S, SNB series	2
SSK-200	174	161.5	112.5	1928, 2030	PKB10PM, 10P, PKB10S, SNB series	2
SSK-210	192	180.5	131.5	2121	PKB10PM, 10P, PKB10S, SNB series	2
SSK-250	230	215.5	166.5	2535	PKB10PM, 10P, PKB10S, SNB series	2
SSK-280	260	244.5	195.5	2828, 2838	PKB10PM, 10P, PKB10S, SNB series	2
SSK-300	280	264.5	215.5	3030, 3040	PKB10PM, 10P, PKB10S, SNB series	2
SSK-350	324	302.5	253.5	3535, 3545	PKB10PM, 10P, PKB10S, SNB series	2
SSK-400	374	354.5	305.5	4050, 4060	PKB20S, SNB series	2
SSK-530	484	462	380	5060, 5070	PKB20S, SNB series	2
SSK-630	590	562	–	6080	PKB20S, SNB series	2

SNB series

PKB−10PM, 10P

PKB−10S, 20S

■ Pole mounting strap and belt, SNB and PKB series are sold separately. See page 323 ~ 324 for further details.

SNB series STAINLESS STEEL POLE MOUNTING STRAP NEW

SNB dimensions

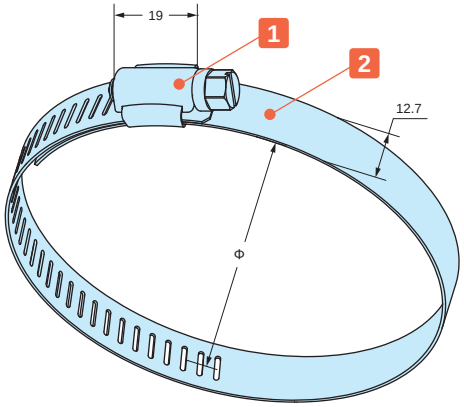

- Corrosion resistant stainless steel (SUS304) belt clamp.
- It can be installed securely by tightening the screw.
- 8 mm nut driver (box driver) is recommended for tightening. Minus screw driver can also be used.

Components

No.	Part name	Pcs	Material	Finish
1	Bracket	1	Stainless steel SUS304	Polished
2	Strap	1	Stainless steel SUS304	Polished

Product no. / Dimensions

Product no.	Applicable diameter (Φ)	Strap width	Strap thickness	Recommended torque N • m	Weight (g)	Pack of
SNB 52- 76	52 ~ 76	12.7	0.6	0.7 ~ 1.0	27.5	1
SNB 72- 95	72 ~ 95	12.7	0.6	0.7 ~ 1.0	30	1
SNB 91-114	91 ~ 114	12.7	0.6	0.7 ~ 1.0	34.5	1
SNB105-127	105 ~ 127	12.7	0.6	0.7 ~ 1.0	37.5	1
SNB117-140	117 ~ 140	12.7	0.6	0.7 ~ 1.0	39.5	1
SNB130-153	130 ~ 153	12.7	0.6	0.7 ~ 1.0	41.5	1
SNB142-165	142 ~ 165	12.7	0.6	0.7 ~ 1.0	43.5	1
SNB155-178	155 ~ 178	12.7	0.6	0.7 ~ 1.0	46.5	1
SNB168-191	168 ~ 191	12.7	0.6	0.7 ~ 1.0	49	1
SNB181-204	181 ~ 204	12.7	0.6	0.7 ~ 1.0	51	1
SNB194-217	194 ~ 217	12.7	0.6	0.7 ~ 1.0	52.5	1
SNB207-230	207 ~ 230	12.7	0.6	0.7 ~ 1.0	57	1
SNB220-243	220 ~ 243	12.7	0.6	0.7 ~ 1.0	59.5	1
SNB233-256	233 ~ 256	12.7	0.6	0.7 ~ 1.0	62.5	1
SNB246-269	246 ~ 269	12.7	0.6	0.7 ~ 1.0	64	1
SNB259-282	259 ~ 282	12.7	0.6	0.7 ~ 1.0	67.5	1
SNB272-295	272 ~ 295	12.7	0.6	0.7 ~ 1.0	70	1
SNB285-308	285 ~ 308	12.7	0.6	0.7 ~ 1.0	71	1

- Recommended torque listed is for reference only; actual may differ. Assemble after testing torque.

SNB Strap required

Suitable series	Suitable models						Required
SSK series	SSK-S1	SSK-160	SSK-170	SSK-200	SSK-210	SSK-250	2
	SSK-280	SSK-300	SSK-350	SSK-400	SSK-530		
WGMB series	WGMB-1W						1

PKB series POLE MOUNTING BELT

PKB−10PM, 10P

PKB−10S, 20S

- Pole mounting belt for attachment of enclosures with suitable pole mount brackets or construction onto poles.
- Designed for one time use only (not reusable).
- Strong stainless steel clamping type and easy installation plastic type are available.

PKB dimensions

- DXF/DWG/PDF drawings available on our website.

PKB-10PM, 10P

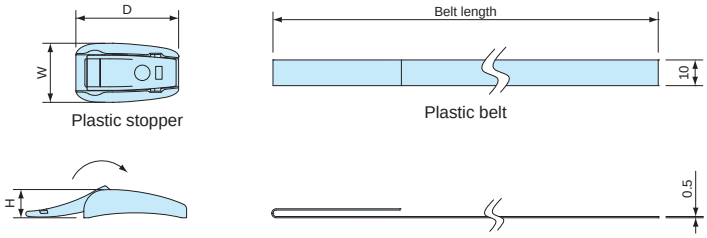

PKB-10S

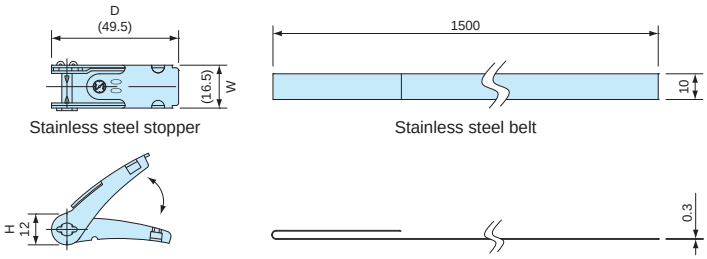

PKB-20S

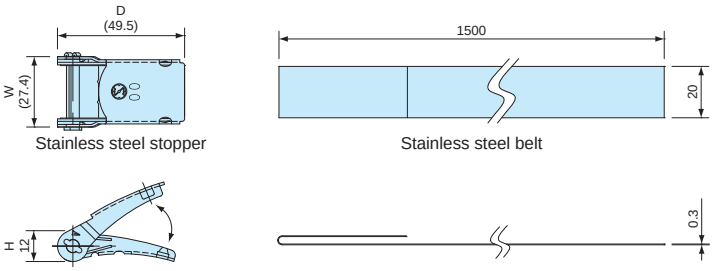

Components

No.	Part name	Material	Color / Finish
1	Stopper	Stainless steel SUS304 • POM	Barrel finish • Black
2	Belt	Stainless steel SUS430 • PET	Bright annealed finish • Gray

Product no. / Dimensions

Product no.	W	D	H	Belt length	Belt material	Tensile strength (horizontal)	Weight (g)	Pack of
PKB-10PM	24	23	11	500 mm	PET	0.8kN	14	2
PKB-10PM	23	40	11	1,500 mm	PET	1.3kN	31.8	2
PKB-10S	16.5	49.5	12	1,500 mm	Stainless steel SUS304	1.4kN	101.6	2
PKB-20S	27.4	49.5	12	1,500 mm	Stainless steel SUS430	2.9kN	182.2	2

IP67 POLYCARBONATE BOX

SPCP・SPCM SERIES APPLICATION EXAMPLE

Made from polycarbonate material, the SPCP・SPCM series features not only high durability, but also comes with IP67 protection.
Suitable to be used in a wide range of applications, such as FA/control, measurement equipment, network communication and so on.

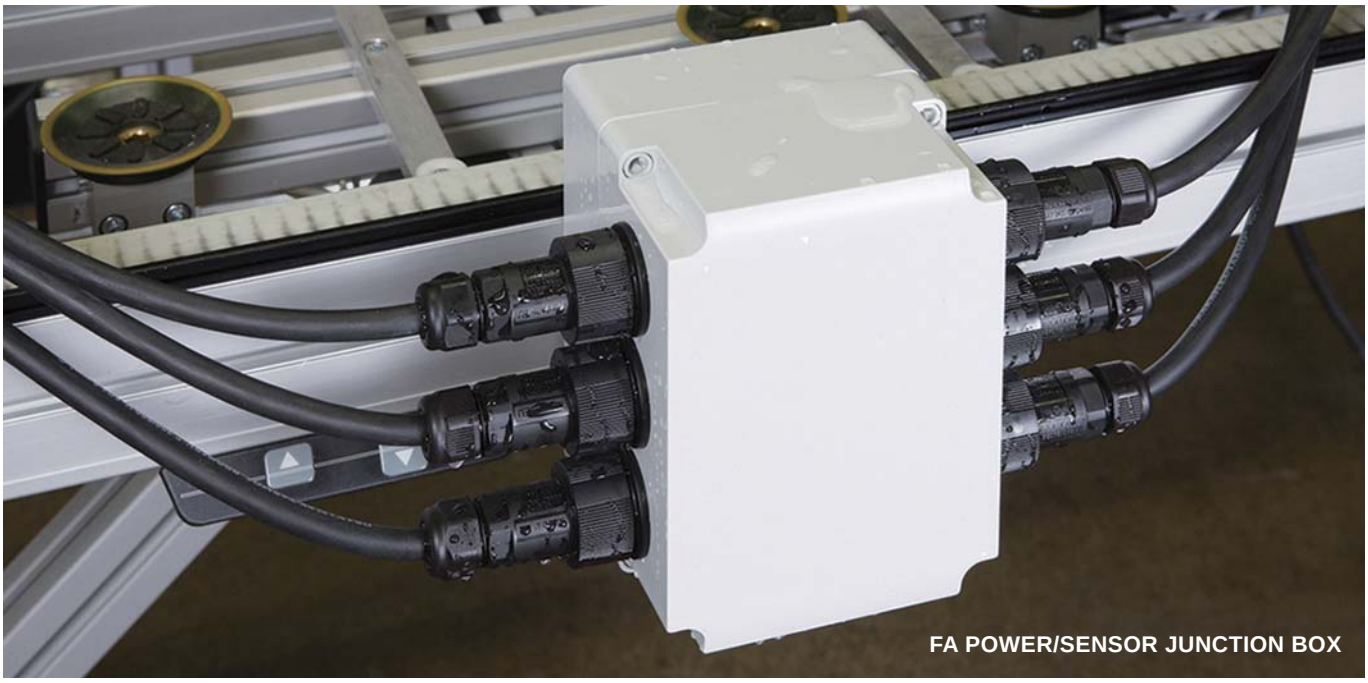

FA POWER/SENSOR JUNCTION BOX

INDUSTRIAL MOTOR JUNCTION BOX

AUTOMATIC DOOR OPEN/CLOSE SWITCH

DIGITAL DIFFERENTIAL MANOMETER

Product by KRONE CORPORATION (Japan)

PARTS FEEDER COUNTER

REMOTE GREENHOUSE MONITORING SYSTEM

METEOROLOGICAL MONITOR

WATER LEVEL METER

Product by HOKUTO RIKEN (Japan)

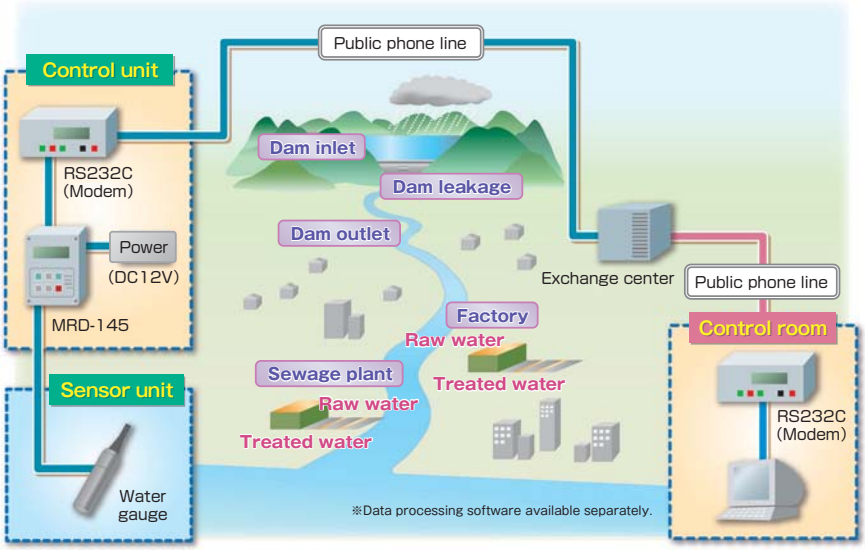

DIGITAL ANEMOMETER

Product by North One (Japan)

SENSOR NETWORK MONITOR

Product by KYOSAITECHNOS (Japan)

FIELD DATA LOGGER

Product by M.C.S (Japan)

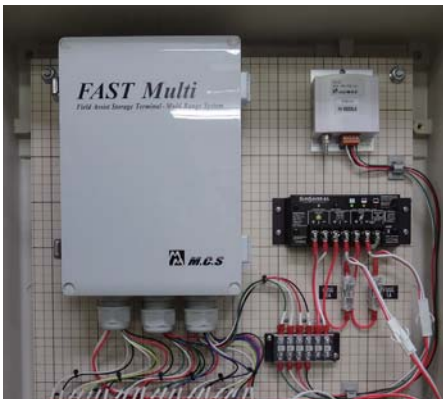

MONITORING CAMERA

Product by ACE PROMOTION (Japan)

TAKACHI

SPCP SERIES IP67 POLYCARBONATE BOX

Technical Data

Protection class: IP67
Operating temperature: -20°C ~ +75°C
Recommended torque: 1N • m ~ 1.5N • m

- Tough polycarbonate material for superior impact resistance.
- Available in 28 different sizes, with 2 different cover types (white gray and transparent).
- Suitable to be used as terminal junction box, control box, communication unit and so on.
- Mountable on walls by using the cover holes for fastening.

Components

No.	Part name	Pcs	Material	Color / Finish
1	Cover	1	Polycarbonate UL94V−2	White gray • Transparent
2	Body	1	Glass fiber filled polycarbonate UL94V−0	White gray
3	Gasket	1	Polyurethane	Black
4	Cover screw	4	Polyamide	White gray
5	Tapping screw (for mounting plate)	4	Steel	Unichrome plated

SPCP dimensions

■ Drawings below are reference examples only.
DXF/DWG/PDF drawings available on our website.

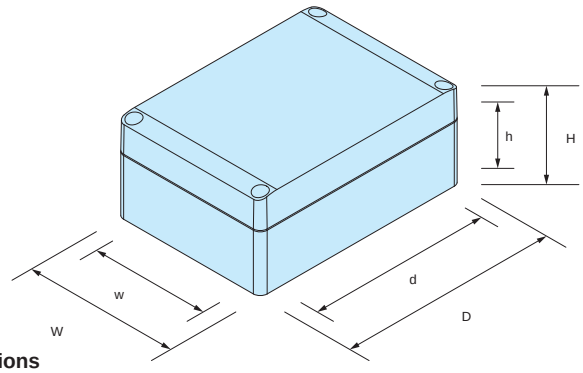

Product no. / Dimensions

Product no.				Dimensions (External)			Dimensions (Internal)			Weight (g)
G type		T type								
Cover	Body	Cover	Body	W	D	H	w	d	h	
● White gray		○ Transparent	● White gray							
SPCP081304G		SPCP081304T		75	125	35	65.5	91	20.5	120
SPCP081305G		SPCP081305T		75	125	50	65.5	91	35.5	150
SPCP081306G		SPCP081306T		75	125	60	65.5	91	45.5	161
SPCP081308G		SPCP081308T		75	125	75	65.5	91	60.5	213
SPCP081310G		SPCP081310T		75	125	100	65	90.5	85.5	278
SPCP081313G		SPCP081313T		75	125	125	64.5	90	110.5	306
SPCP101004G		SPCP101004T		100	100	35	90.5	66	20.5	124
SPCP101006G		SPCP101006T		100	100	60	90.5	66	45.5	165
SPCP131304G		SPCP131304T		125	125	35	115.5	91	20.5	178
SPCP131305G		SPCP131305T		125	125	50	115.5	91	35.5	215
SPCP131306G		SPCP131306T		125	125	60	115.5	91	45.5	243
SPCP131308G		SPCP131308T		125	125	75	115.5	91	60.5	294
SPCP131310G		SPCP131310T		125	125	100	115	90.5	85.5	366
SPCP131313G		SPCP131313T		125	125	125	114.5	90	110.5	405
SPCP131804G		SPCP131804T		125	175	35	115.5	141	20.5	237
SPCP131805G		SPCP131805T		125	175	50	115.5	141	35.5	282
SPCP131806G		SPCP131806T		125	175	60	115.5	141	45.5	297
SPCP131808G		SPCP131808T		125	175	75	115.5	141	60.5	378
SPCP131810G		SPCP131810T		125	175	100	115	140.5	85.5	463
SPCP131813G		SPCP131813T		125	175	125	115	140.5	110.5	531
SPCP131815G		SPCP131815T		125	175	150	114	139.5	135.5	600
SPCP181808G		SPCP181808T		175	175	75	165.5	141	60.5	475
SPCP181810G		SPCP181810T		175	175	100	165	140.5	85.5	584
SPCP181813G		SPCP181813T		175	175	125	164.5	140	110.5	652
SPCP181815G		SPCP181815T		175	175	150	164	139.5	135.5	738
SPCP182508G		SPCP182508T		175	250	75	165.5	216	60.5	637
SPCP182510G		SPCP182510T		175	250	100	165	215.5	85.5	754
SPCP182515G		SPCP182515T		175	250	150	164	214.5	135.5	959

Accessories (Optional parts)

Terminal block • Terminal cover STB • STC series
See page STB • STC-1 ~ STB • STC-4

Mounting bracket SFL-1
See page SPCM • SPCP-ACC-1

Mounting plate SMP series
See page SPCM • SPCP-ACC-1

Cable gland
See cable gland pages

Protective vent PMF series
See PMF pages

DIN-Rail FDR series
See page FDR-1 ~ FDR-2

Terminal block stopper TKR series
See page DIN-ACC-2

DIN-Rail mounting base DRA, DRT, CKD series
See page DIN-ACC-1 ~ DIN-ACC-2

Pole mounting bracket & belt SSK, PKB series
See page SSK-1 ~ SSK-4

Outdoor roof SR series
See page SPCM • SPCP-ACC-2

TAKACHI

SPCM SERIES IP67 POLYCARBONATE BOX with METRIC KNOCK-OUTS

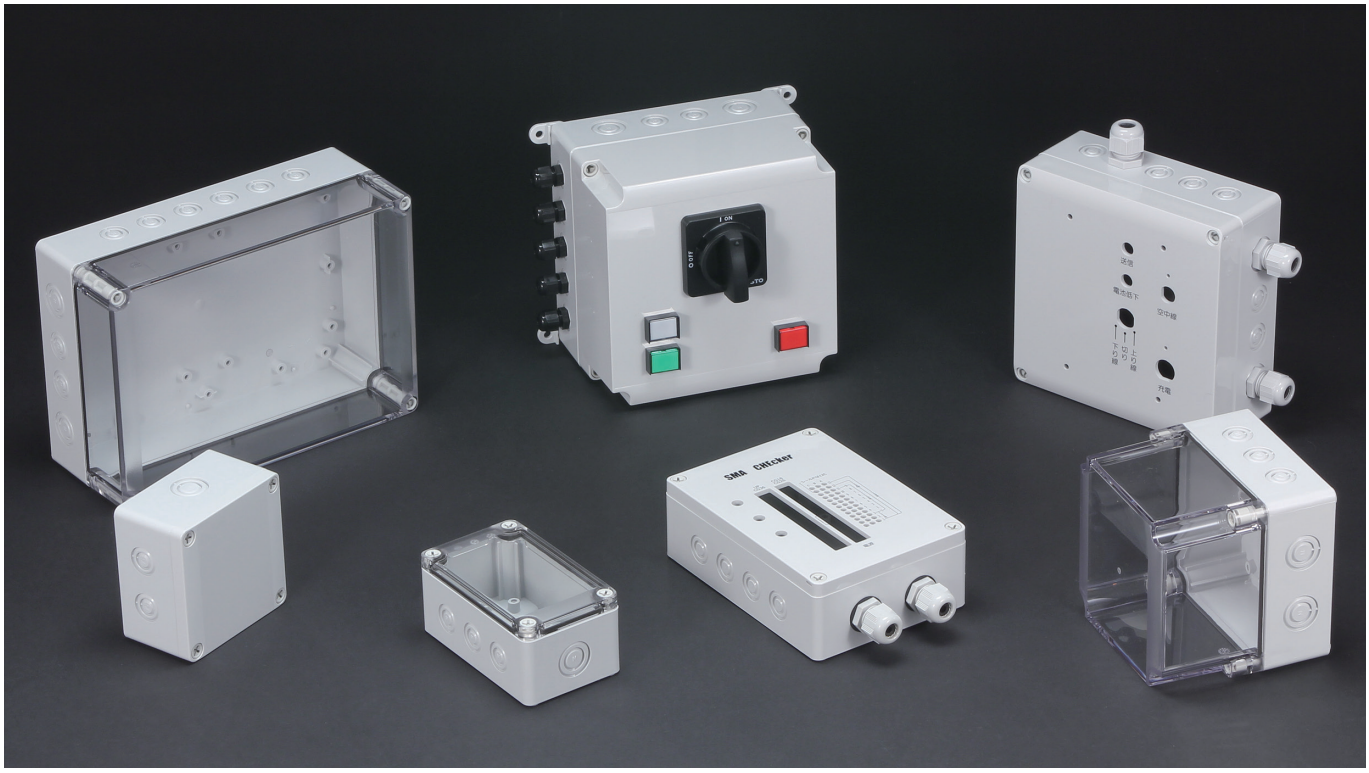

Technical Data
Protection class: IP67 Operating temperature: -20°C ~ +75°C Recommended torque: 1N • m ~ 1.5N • m

- Tough polycarbonate material for superior impact resistance.
- Available in 21 different sizes, with 2 different cover types (white gray and transparent).
- Molded with metric knock-outs for easy removal for cable entry.
- Suitable to be used as terminal junction box, control box, communication unit and so on.
- Mountable on walls by using the cover holes for fastening.

⇐

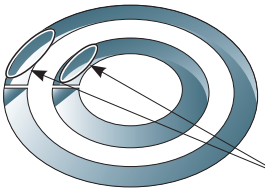

- To knock out the hole covers, rest a flathead screwdriver at the "A" points, and punch out the knock-outs by hammering on the rear end of the screwdriver handle with a hammer.

Components

No.	Part name	Pcs	Material	Color / Finish
1	Cover	1	Polycarbonate UL94V−2	White gray • Transparent
2	Body	1	Glass fiber filled polycarbonate UL94V−0	White gray
3	Gasket	1	Polyurethane	Black
4	Cover screw	4	Polyamide	White gray
5	Tapping screw (for mounting plate)	4	Steel	Unichrome plated

SPCM dimensions

■ Drawings below are reference examples only.
DXF/DWG/PDF drawings available on our website.

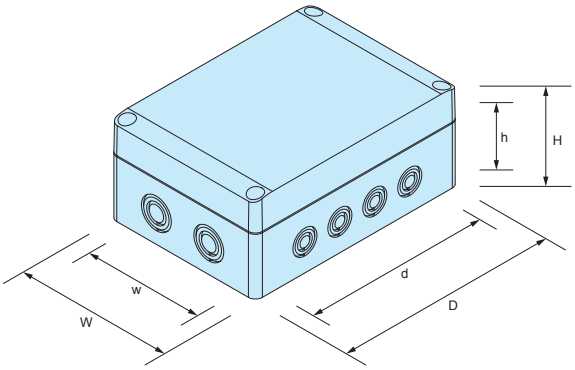

※Metric knock-outs are on all 4 sides.

Product no. / Dimensions

Product no.				Dimensions (External)			Dimensions (Internal)			Weight (g)
G type		T type								
Cover	Body	Cover	Body	W	D	H	w	d	h	
● White gray		○ Transparent	● White gray							
SPCM081306G		SPCM081306T		75	125	60	65.5	91	45.5	159
SPCM081308G		SPCM081308T		75	125	75	65.5	91	60.5	208
SPCM081310G		SPCM081310T		75	125	100	65	90.5	85.5	275
SPCM081313G		SPCM081313T		75	125	125	64.5	90	110.5	299
SPCM101006G		SPCM101006T		100	100	60	90.5	66	45.5	164
SPCM131306G		SPCM131306T		125	125	60	115.5	91	45.5	243
SPCM131308G		SPCM131308T		125	125	75	115.5	91	60.5	292
SPCM131310G		SPCM131310T		125	125	100	115	90.5	85.5	366
SPCM131313G		SPCM131313T		125	125	125	114.5	90	110.5	401
SPCM131806G		SPCM131806T		125	175	60	115.5	141	45.5	294
SPCM131808G		SPCM131808T		125	175	75	115.5	141	60.5	373
SPCM131810G		SPCM131810T		125	175	100	115	140.5	85.5	450
SPCM131813G		SPCM131813T		125	175	125	115	140.5	110.5	519
SPCM131815G		SPCM131815T		125	175	150	114	139.5	135.5	588
SPCM181808G		SPCM181808T		175	175	75	165.5	141	60.5	468
SPCM181810G		SPCM181810T		175	175	100	165	140.5	85.5	569
SPCM181813G		SPCM181813T		175	175	125	164.5	140	110.5	639
SPCM181815G		SPCM181815T		175	175	150	164	139.5	135.5	723
SPCM182508G		SPCM182508T		175	250	75	165.5	216	60.5	633
SPCM182510G		SPCM182510T		175	250	100	165	215.5	85.5	745
SPCM182515G		SPCM182515T		175	250	150	164	214.5	135.5	946

Accessories (Optional parts)

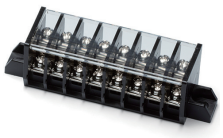

Terminal block • Terminal cover STB • STC series
See page STB • STC-1 ~ STB • STC-4

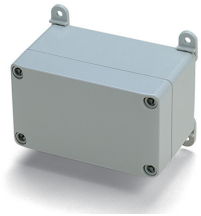

Mounting bracket SFL-1
See page SPCM • SPCP-ACC-1

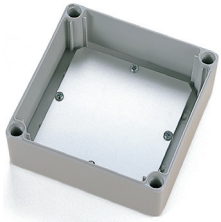

Mounting plate SMP series
See page SPCM • SPCP-ACC-1

Cable gland
See cable gland pages

Protective vent PMF series
See PMF pages

DIN-Rail FDR series
See page FDR-1 ~ FDR-2

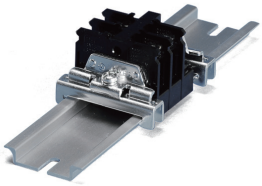

Terminal block stopper TKR series
See page DIN-ACC-2

Pole mounting bracket & belt SSK, PKB series
See page SSK-1 ~ SSK-4

Outdoor roof SR series
See page SPCM • SPCP-ACC-2

SFL-1 PLASTIC MOUNTING BRACKET

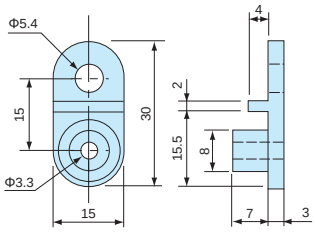

Product no. / Feature

Product no.	Material	Screw	Pcs
SFL-1	Polycarbonate	M4 Tapping	4

SMS4-8 MOUNTING SCREW

- Mounting screws for PCB mounting on SPCP • SPCM series.
  ※1 set included with each SPCP • SPCM enclosure.

Product no. / Feature

Product no.	Material	Screw	Pcs
SMS4-8 (M4-8 Pan head tapping)	Steel	Trivalent chromate	4

SMP SERIES ALUMINIUM MOUNTING PLATE

SMP dimensions

- Drawings below are reference examples only.
  DXF/DWG/PDF drawings available on our website.

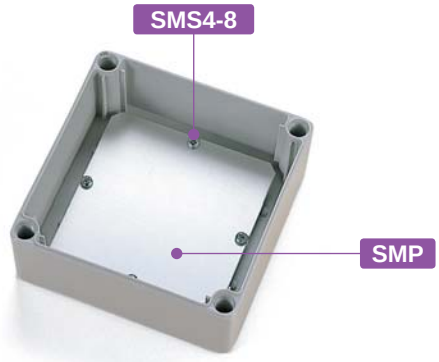

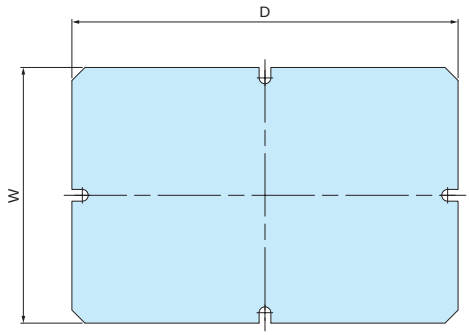

Product no. / Dimensions

Product no.	Suitable box	W	D	Weight (g)
SMP0813	SPCM • SPCP0813	48	98	18
SMP1010	SPCM • SPCP1010	78	78	24
SMP1313	SPCM • SPCP1313	98	98	40.5
SMP1318	SPCM • SPCP1318	98	148	61
SMP1818	SPCM • SPCP1818	148	148	93
SMP1825	SPCM • SPCP1825	148	223	140.5

- Customization services (clinching standoffs, hole milling, and others) available.
  See website for more details.

SR SERIES OUTDOOR ROOF for SPCM • SPCP

- Roof and spacer attachments are easily attached onto the enclosure using existing cover fastening holes.
- Recommended for outdoor environments for protection against rain, etc.

Roof

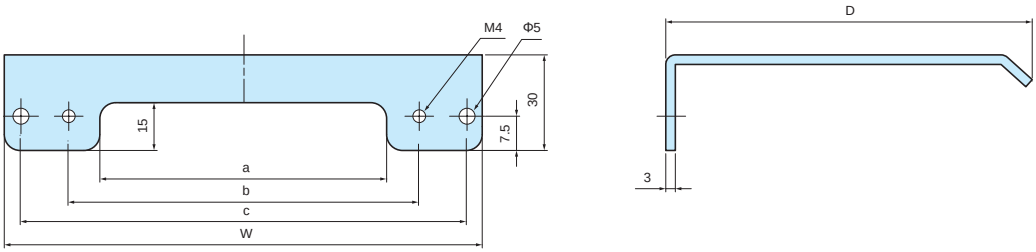

Spacer

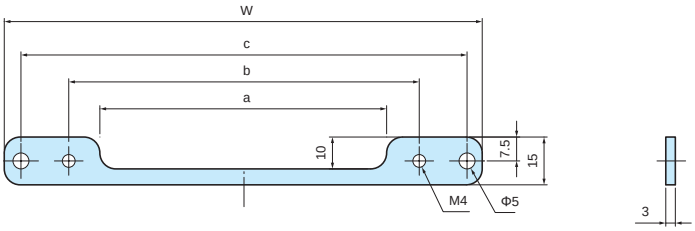

Components

No.	Part name	Pcs	Material	Color / Finish
1	Roof	1	Aluminium A1050P t = 3.0mm	Light gray / Painted
2	Spacer	1	Aluminium A1050P t = 3.0mm	Light gray / Painted
-	Screw	4	Stainless steel	Unfinished
-	O-ring	4	NBR	Black

Product no. / Dimensions

Product no.	W	D	a	b	c	Suitable box
SR0808	100	90	50	60	90	SPCM • SPCP 081308
SR0810	100	115	50	60	90	SPCM • SPCP 081310
SR0813	100	140	50	60	90	SPCM • SPCP 081313
SR1308	150	90	90	110	140	SPCM • SPCP 131308 131808
SR1310	150	115	90	110	140	SPCM • SPCP 131310 131810
SR1313	150	140	90	110	140	SPCM • SPCP 131313 131813
SR1315	150	165	90	110	140	SPCM • SPCP 131815
SR1808	200	90	140	160	190	SPCM • SPCP 181808 182508
SR1810	200	115	140	160	190	SPCM • SPCP 181810 182510
SR1813	200	140	140	160	190	SPCM • SPCP 181813
SR1815	200	165	140	160	190	SPCM • SPCP 181815 182515

TAKACHI

STB SERIES TERMINAL BLOCK

(FW2)

■ Terminal block for SPCM • SPCP series.

Components

No.	Part name	Pcs	Material	Color / Finish
1	Base	1	PBT (UL94V-0)	Black
2	Terminal	1	Brass	Nickel plated
3	Terminal screw	2 x P	Steel	Nickel plated
—	Mounting screw	4	Steel	Trivalent chromate

STB-814

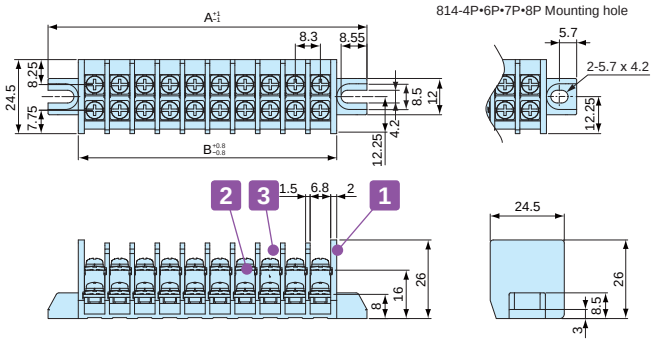

Specification

1. Electrical Rating 300V 30A
2. Insulation Resistance DC500V 1000MΩ ~
3. Withstand Voltage AC2500V (Tested for 1 min.)
4. Operating Temp. Range -25°C ~ +80°C
5. Storage Temp. Range -25°C ~ +80°C

STB-815

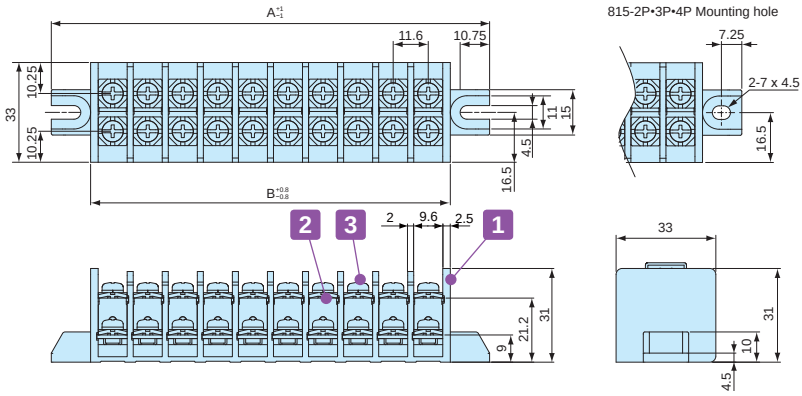

Specification

1. Electrical Rating 300V 30A
   (600V 30A JIS IEC compliant)
2. Insulation Resistance DC500V 1000MΩ ~
3. Withstand Voltage AC2500V (Tested for 1 min.)
4. Operating Temp. Range -25°C ~ +80°C
5. Storage Temp. Range -25°C ~ +80°C

Product no. / Dimensions

Product no.	P (Number of poles)	A	B	Suitable SPCM • SPCP box W x D dimensions
STB814- 3P	3	47.4	27.4	75×125
STB814- 4P	4	55.7	35.7	100×100
STB814- 6P	6	72.3	52.3	175×175
STB814- 7P	7	80.6	60.6	100×100
STB814- 8P	8	88.9	68.9	75×125, 125×125
STB814- 9P	9	97.2	77.2	125×125, 125×175, 175×250
STB814-10P	10	105.5	85.5	125×175, 175×250
STB815- 2P	2	52.2	26.2	75×125
STB815- 3P	3	63.8	37.8	100×100
STB815- 4P	4	75.4	49.4	125×125
STB815- 6P	6	98.6	72.6	125×125, 125×175, 175×250
STB815-10P	10	145	119	175×175, 175×250

STC SERIES TERMINAL COVER

- Terminal cover for STB terminal block.
- Use for protecting terminals.

STC814

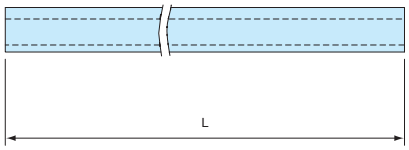

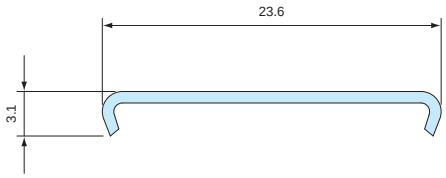

STC815

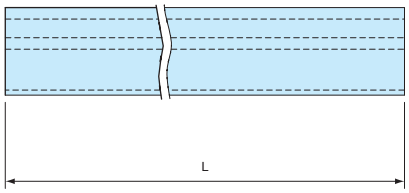

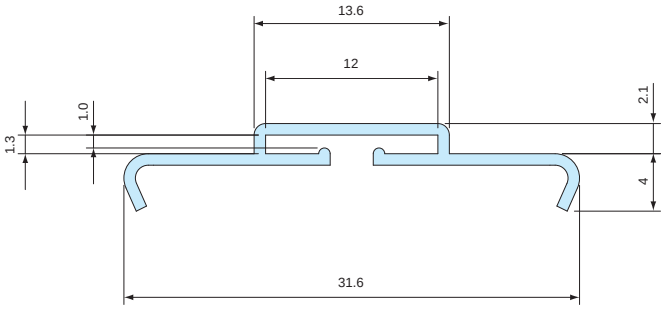

- Material / Color : Polycarbonate t=0.8mm / Transparent

Product no. / Dimensions

Product no.	P (Number of poles)	L	Compatible terminal
STC814- 3P	3	22.4	STB814- 3P
STC814- 4P	4	30.7	STB814- 4P
STC814- 6P	6	47.3	STB814- 6P
STC814- 7P	7	55.6	STB814- 7P
STC814- 8P	8	63.9	STB814- 8P
STC814- 9P	9	72.2	STB814- 9P
STC814-10P	10	80.5	STB814-10P
STC815- 2P	2	20.2	STB815- 2P
STC815- 3P	3	31.8	STB815- 3P
STC815- 4P	4	43.4	STB815- 4P
STC815- 6P	6	66.6	STB815- 6P
STC815-10P	10	113.0	STB815-10P

STB TERMINAL BLOCK MOUNTING POSITION

■ Drawings below are reference examples only.
DXF/DWG/PDF drawings available on our website.

■ Terminals can be installed in the area with dotted lines.

Suitable box SPCM/SPCP 081305 • 081306 • 081308 • 081310 • 081313

814−3P

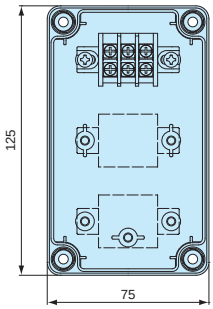

814−8P

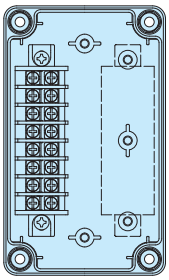

815−2P

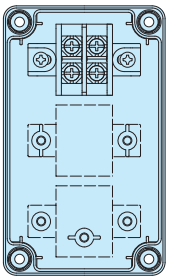

Suitable box SPCM/SPCP 101006

814−4P

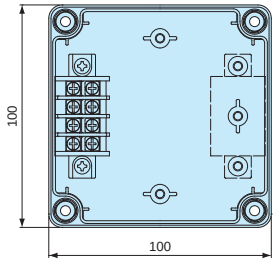

814−7P

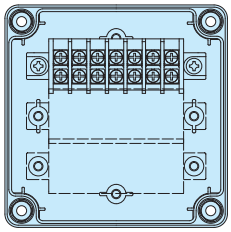

815−3P

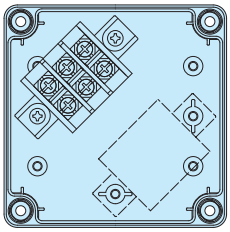

Suitable box SPCM/SPCP 131305 • 131306 • 131308 • 131310 • 131313

814−8P

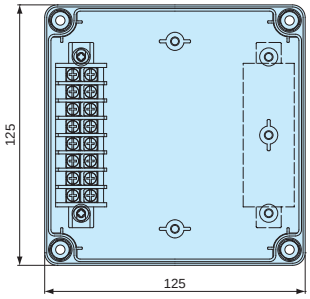

814−9P

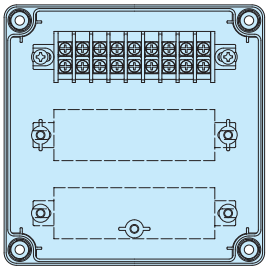

815−4P

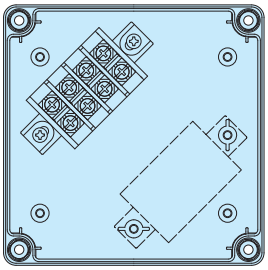

815−6P

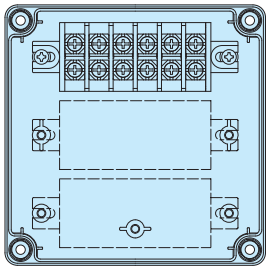

Suitable box SPCM/SPCP 131805 • 131806 • 131808 • 131810 • 131813 • 131815

814−9P

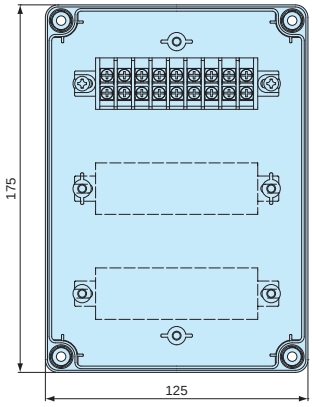

814−10P

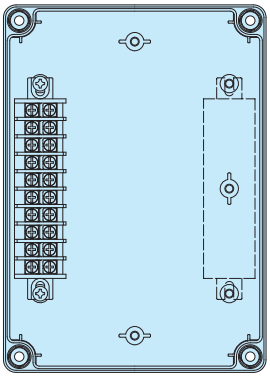

815−6P

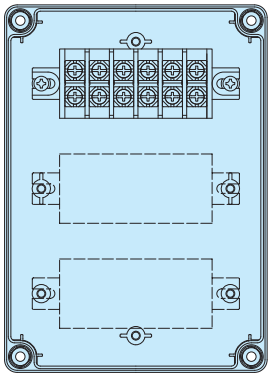

STB TERMINAL BLOCK MOUNTING POSITION

■ Drawings below are reference examples only.
DXF/DWG/PDF drawings available on our website.

■ Terminals can be installed in the area with dotted lines.

Suitable box SPCM/SPCP 181808 • 181810 • 181813 • 181815

814−6P

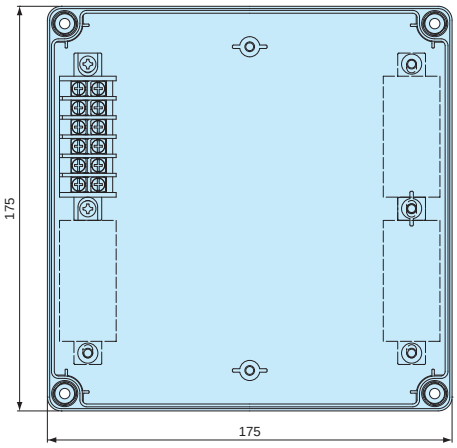

814−10P

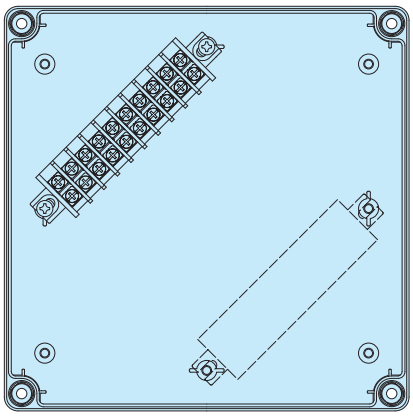

815−10P

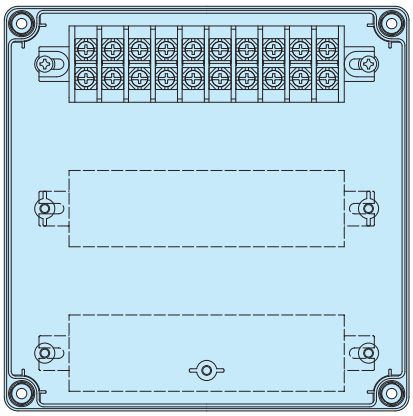

Suitable box SPCM/SPCP 182508 • 182510 • 182515

814−9P

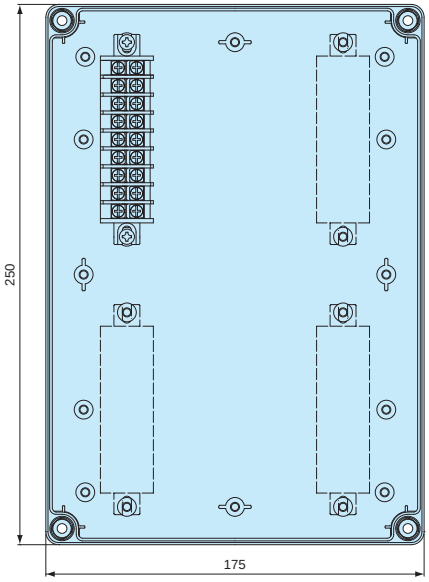

814−10P

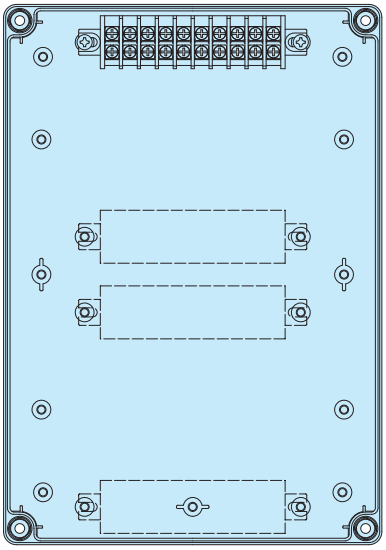

814−10P

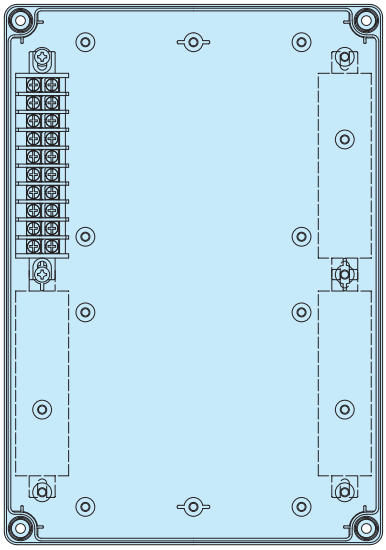

815−6P

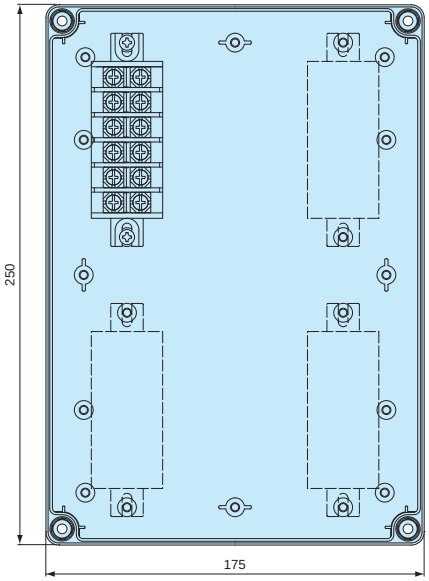

815−10P

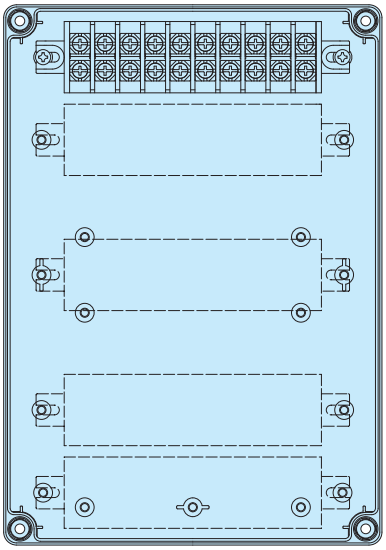

TAKACHI

BCAS SERIES IP65 PLASTIC PULL BOX

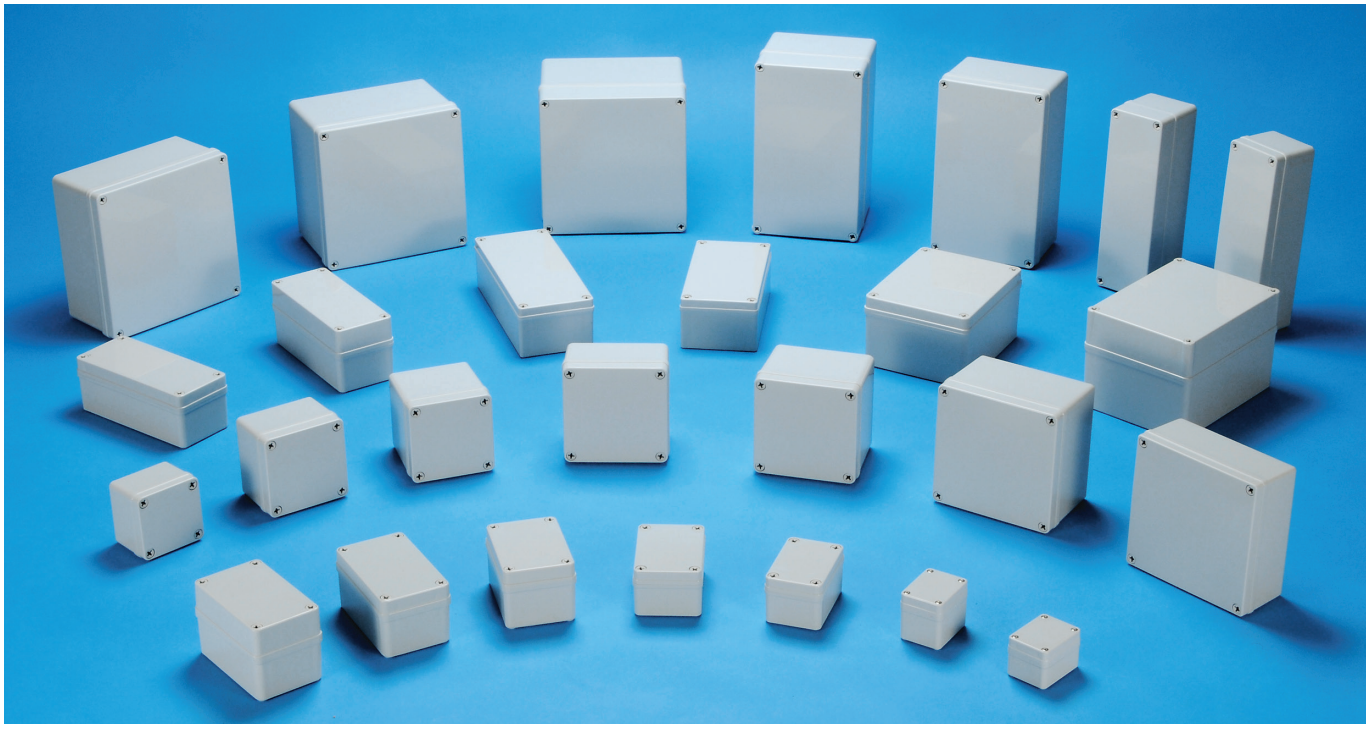

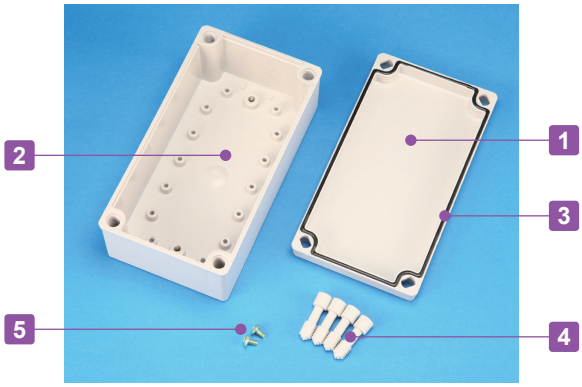

IP65

Technical Data

Protection class: IP65
Operating temperature: -10°C ~ +60°C
Recommended torque:
1N • m ~ 1.5N • m
(1N • m for BCAS050604G, BCAS050605G)

- Small-sized frontal screw fastening type waterproof box.
- Available in 39 different sizes.
- Applicable for various uses as wiring pull box, terminal junction box, switch box and so on.

Components

No.	Part name	Pcs	Material	Color / Finish
1	Top cover	1	ABS UL94HB	White gray
2	Body	1	ABS UL94HB	White gray
3	Gasket	1	Polyurethane	Black
4	Cover screw	4	Nylon • Stainless steel (BCAS050604G and BCAS050605G only)	White gray • Unfinished
5	Tapping screw (for mounting plate)	2 ~ 4	Steel	Trivalent chromate

APPLICATION EXAMPLE

SWITCH BOX

TERMINAL JUNCTION BOX

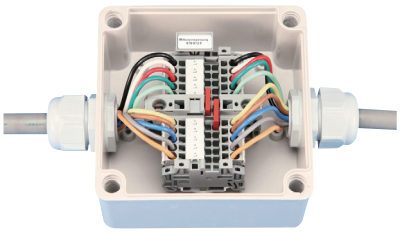

AIR PIPE CONTROLLER

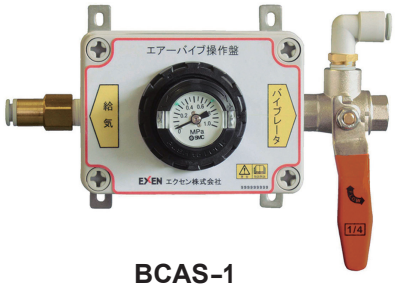

METEOROLOGICAL MONITOR TRANSMITTER

Product by Midori Engineering Laboratory (Japan)

BCAS dimensions

■ Drawings below are reference examples only.
DXF/DWG/PDF drawings available on our website.

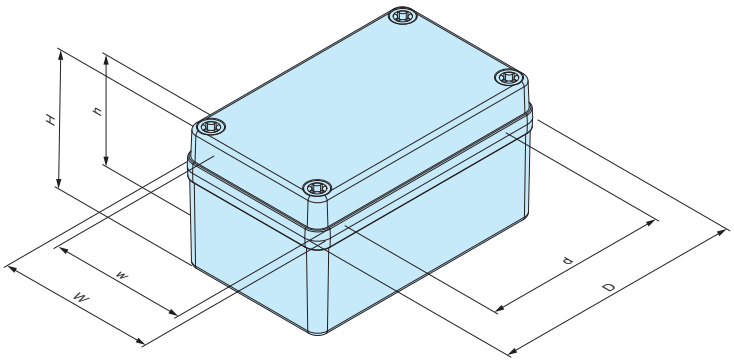

◎ : Guide markings for installation of optional latch/hinge parts.

Product no. / Dimensions

Product no.	Dimensions (External)			Dimensions (Internal)			Weight (g)
	W	D	H	w	d	h	
BCAS050604G	50	65	45	42.5	40	33	69
BCAS050605G	50	65	55	42.5	40	43	76
BCAS060905G	65	95	55	54.5	58	41.5	124
BCAS071005G	75	105	55	65	68	41.3	148
BCAS080806G	80	80	60	69.5	43	46.4	133
BCAS081104G	80	110	45	70	73	31.6	138
BCAS081107G	80	110	70	68.5	73	56.7	165
BCAS081108G	80	110	85	68	74	71.4	191
BCAS081110G	80	110	100	68	74	86.2	227
BCAS081307G	80.5	130	70	69.5	93	56.5	188
BCAS081308G	80	130	85	68.5	93	71.5	222
BCAS081807G	80	180	70	69.5	142.5	57	233
BCAS081808G	80	180	85	69.5	142.5	71.5	275
BCAS082507G	80	250	70	69	212.5	56.5	294
BCAS082508G	80	250	85	69	212.5	71.5	348
BCAS101007G	101.5	101.5	75	89.7	61.3	61.5	212
BCAS101010G	101.5	101.5	100	88.7	60.3	86.5	253
BCAS101807G	100	185	70	88	146.5	56.7	298
BCAS102007G	100	200	70	90.5	163.5	56.5	282
BCAS102307G	100	230	70	90.5	193.5	56.4	336
BCAS121207G	125	125	75	112	86.5	61.5	252
BCAS121210G	125	125	100	113	86.5	86.5	311
BCAS141709G	143	173	95	132	133	81.3	416
BCAS142309G	140	230	95	127	191	81.5	485
BCAS151507G	150	150	75	138.5	112	61.6	322
BCAS151510G	150	150	100	137.5	112	86.6	398
BCAS152004G	150	200	45.5	140.4	162.2	32.5	335
BCAS152007G	150	200	75.5	138.4	162	61.9	423
BCAS152010G	150	200	100.5	138	161.5	86.9	473
BCAS152013G	150	200	130.5	137	160	117.5	582
BCAS152016G	150	200	160	137	160	146.8	631
BCAS152510G	150	250	100	138.5	213	86.1	565
BCAS152513G	150	250	130	138.5	213	116.4	687
BCAS161607G	160	160	70	148	121.5	56.5	334
BCAS202010G	201	201	100	188	163	85.7	604
BCAS202013G	201	201	130	188	161	116.5	685
BCAS202016G	201	201	160	187	162.5	146	801
BCAS202019G	201	201	190	187	162.5	176.3	907.5
BCAS212310G	210	230	100.3	197.8	193.2	87.1	644.5

Accessories (Optional parts)

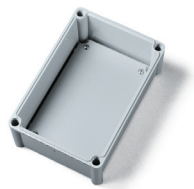

Mounting plate BMP series
See page BCAS-3 ~ BCAS-4

Latch • Hinge BCL55 • BCH55
See page BCAS • BCAL-ACC-1

Spare cover screw CB series
See page BCAS • BCAL-ACC-3

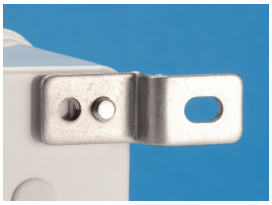

Mounting bracket CK series
See page BCAS • BCAL-ACC-2

Cable gland
See cable gland pages

BMP-Z SERIES STEEL MOUNTING PLATE

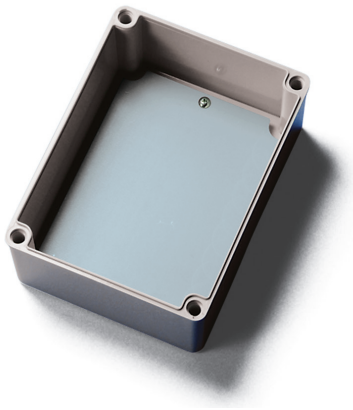

■ Strong but easily customizable.

■ Drawings below are reference examples only.
DXF/DWG/PDF drawings available on our website.

BMP0506Z ~ 1525Z

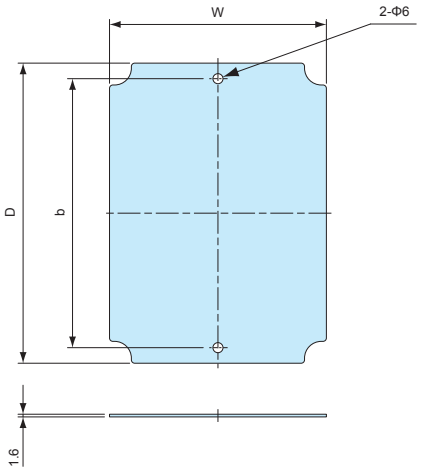

BMP2020Z, 2123Z

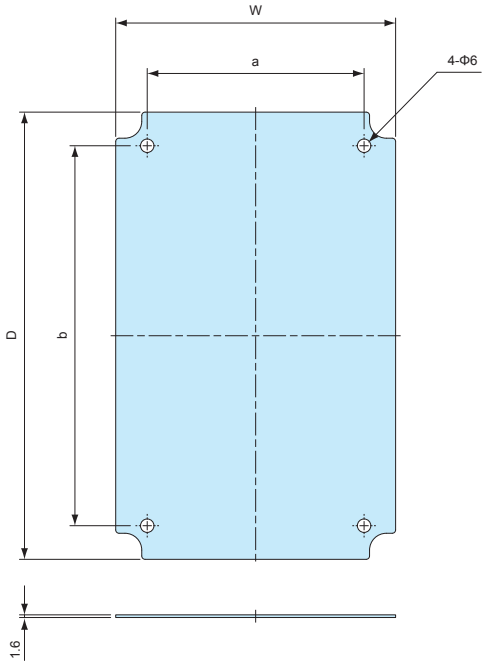

Components

Part name	Material	Color / Finish
Mounting plate	Steel t=1.6	Zinc coated

Product no. / Dimensions

Product no.	W	D	a	b	Suitable box	Weight (g)
BMP0506Z	41	56	–	40	BCAS050604, 050605	23
BMP0609Z	52	82	–	65	BCAS060905	41
BMP0710Z	62	92	–	75	BCAS071005	63
BMP0808Z	67	67	–	50	BCAS080806	47
BMP0811Z	68	98	–	80	BCAS081104, 081107, 081108, 081110	72
BMP0813Z	68	118	–	99	BCAS081307, 081308	87
BMP0818Z	69	169	–	150	BCAS081807, 081808	134
BMP0825Z	69	239	–	220	BCAS082507, 082508	193
BMP1010Z	86	86	–	60	BCAS101007, 101010	80
BMP1018Z	89	173	–	139	BCAS101807	177
BMP1121Z	77	177	–	158	BCAS102007	159
BMP1023Z	88	218	–	184	BCAS102307	226
BMP1212Z	114	114	–	70	BCAS121207, 121210	151
BMP1417Z	132	162	–	130	BCAS141709	251
BMP1423Z	123	213	–	190	BCAS142309	305
BMP1515Z	121	121	–	110	BCAS151507, 151510	172
BMP1616Z	142	142	–	120	BCAS161607	237
BMP1520Z	126	176	–	160	BCAS152004, 152007, 152010, 152013, 152016	262
BMP1525Z	127	227	–	210	BCAS152510, 152513	346
BMP2020Z	176	176	120	150	BCAS202010, 202013, 202016, 202019	371
BMP2123Z	183	203	160	180	BCAS212310	447

BMP-P SERIES PLASTIC MOUNTING PLATE

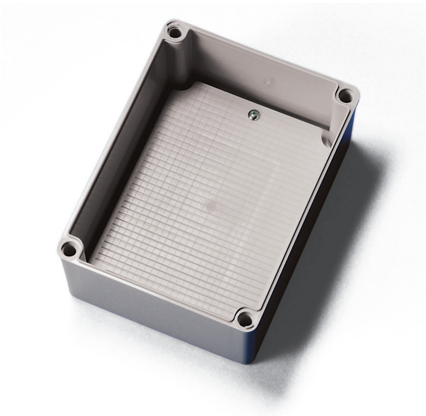

- Lightweight ABS plastic mounting plate.
- Not available for BCAS050604, 050605, 060905, 071005, 080806, 101807, 102307, and 212310 models.

- Drawings below are reference examples only. DXF/DWG/PDF drawings available on our website.

BMP0811P

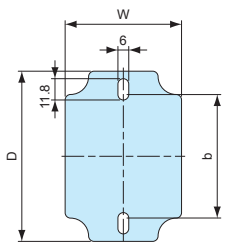

BMP0813P ~ 1616P

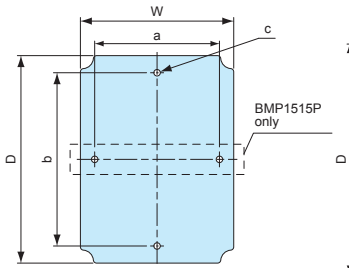

BMP0825P, 1423P, 1520P, 1525P

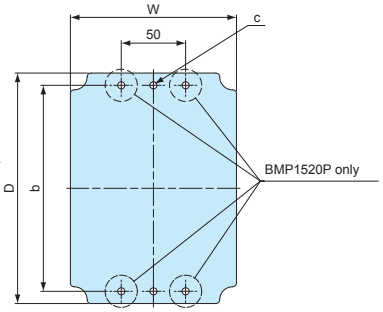

BMP2020P

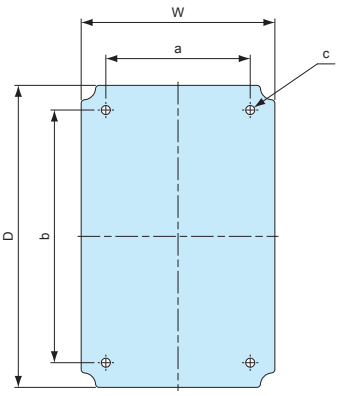

Components

Part name	Material	Color / Finish
Mounting plate	ABS	White gray

Product no. / Dimensions

Product no.	W	D	a	b	c(Φ)	Thickness	Suitable box	Weight (g)
BMP0811P	64.5	94.3	–	68.4	–	3.5	BCAS081104, 081107, 081108, 081110	21
BMP0813P	64.5	114.5	–	99	Φ6	3.5	BCAS081307, 081308	24
BMP0818P	64.5	164	–	148.5	Φ6	3.5	BCAS081807, 081808	37
BMP0825P	64.2	234.5	–	219.5	Φ6	3.5	BCAS082507, 082508	59
BMP1010P	81.5	81.2	–	60	Φ6	3.5	BCAS101007, 101010	22
BMP1121P	76.5	175.8	–	157.8	Φ6	3	BCAS102007	40
BMP1212P	107	107	–	70	Φ5.5	3.5	BCAS121207, 121210	39
BMP1417P	125.5	155.5	–	130	Φ6	3.5	BCAS141709	69
BMP1423P	122.6	212.5	–	190	Φ5.5	3.7	BCAS142309	103.5
BMP1515P	123	123	110	110	Φ6	3.5	BCAS151507, 151510	52
BMP1616P	143.5	143.5	–	120	Φ6	3.2	BCAS161607	66
BMP1520P	129	179	–	160	Φ5.5	3.5	BCAS152004, 152007, 152010, 152013, 152016	92
BMP1525P	129	228.5	–	210	Φ6	3.5	BCAS152510, 152513	112
BMP2020P	178.5	178.5	120	150	Φ5.5	3.5	BCAS202010, 202013, 202016, 202019	125

BCAL SERIES IP65 PLASTIC BOX

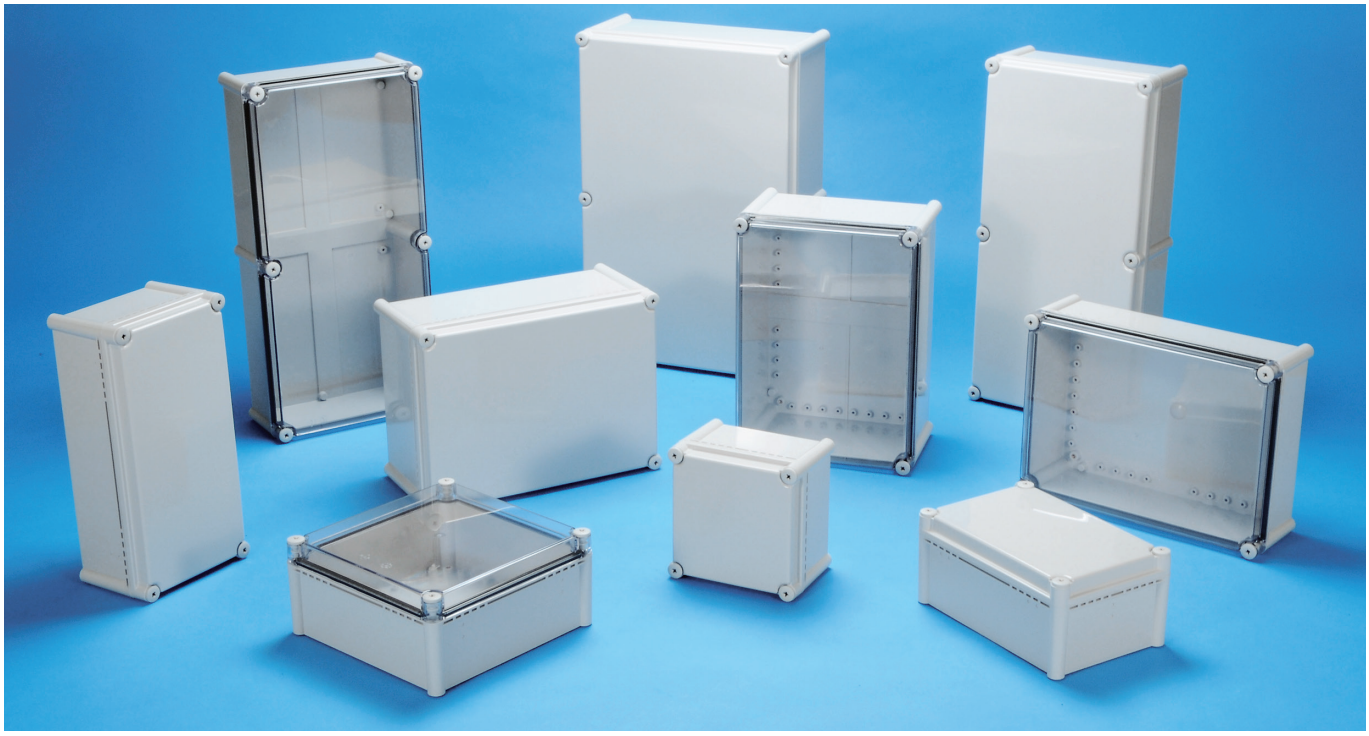

Technical Data

Protection class: IP65
Operating temperature: -10°C ~ +60°C
Recommended torque: 1N • m ~ 1.5N • m

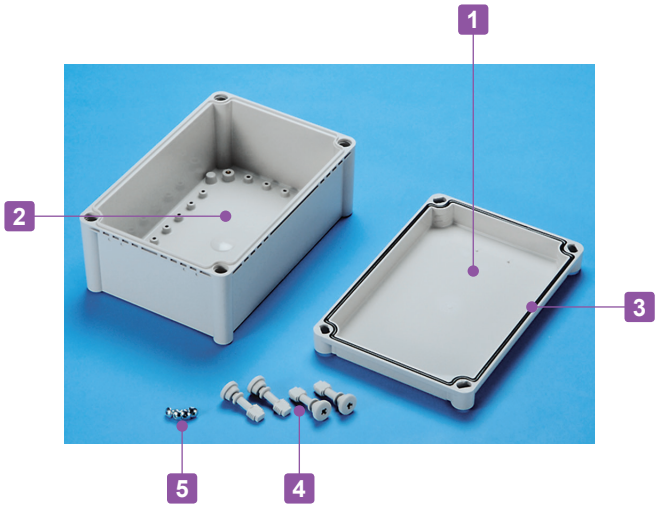

- Large-sized frontal screw fastening type waterproof box.
- 11 different sizes available.
- Applicable for uses in various fields such as FA, control box, network communication, and so on.
- 2 different top cover models (ABS-White gray • Polycarbonate-Transparent) are available.
- Guide markings are available for installation of optional latch/hinge parts.

◎ : Guide markings

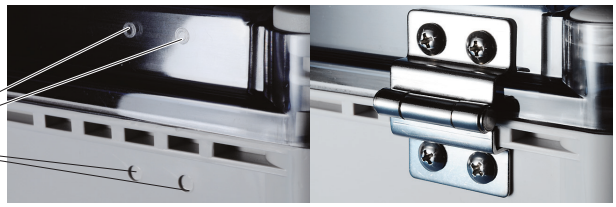

Components

No.	Part name	Pcs	Material	Color / Finish
1	Top cover	1	ABS UL94HB • Polycarbonate (UL94V-0)	White gray • Transparent
2	Body	1	ABS UL94HB	White gray
3	Gasket	1	Polyurethane	Black
4	Cover screw	4 ~ 6	Nylon	White gray • Unfinished
5	Tapping screw (for mounting plate)	4	Steel	Trivalent chromate

BCAL dimensions

■ Drawings below are reference examples only.
DXF/DWG/PDF drawings available on our website.

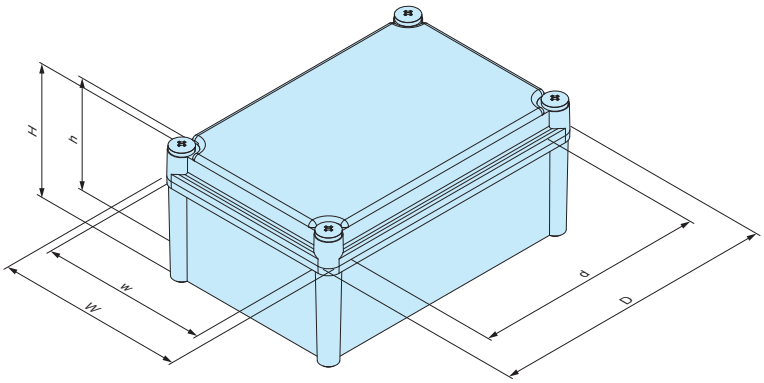

Product no. / Dimensions

Product no.				Dimensions (External)			Dimensions (Internal)			Weight (g)
G type		T type								
Top cover	Body	Top cover	Body	W	D	H	w	d	h	
● White gray		○ Transparent	● White gray							
BCAL191913G		BCAL191913T		190	190	128	167	140	111.5	722
BCAL192813G		BCAL192813T		190	280	128	166	229	111.5	896
BCAL192818G		BCAL192818T		190	280	178	164	230	162	1,009
BCAL193813G		BCAL193813T		190	380	128	167	329	111	1,143
BCAL193818G		BCAL193818T		190	380	178	165	327.5	162	1,258
BCAL282813G		BCAL282813T		280	280	128	256	229	112	1,148
BCAL283413G		BCAL283413T		280	340	128	255.5	287	111.8	1,441
BCAL283813G		BCAL283813T		280	380	128	256	329	111.5	1,423
BCAL283818G		BCAL283818T		280	380	178	254	324	161.5	1,745
BCAL285613G		BCAL285613T		280	560	128	255	507	112	2,272
BCAL385618G		BCAL385618T		380	560	178	354	505	159.7	2,948

Accessories (Optional parts)

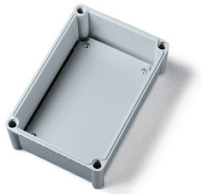

Mounting plate BMP series
See page BCAL-3

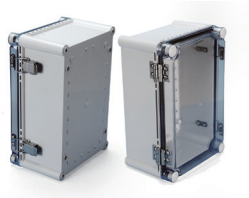

Latch • Hinge BCL65 • BCH65
See page BCAS • BCAL-ACC-1

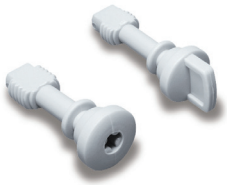

Spare Cover screw CB28 series
See page BCAS • BCAL-ACC-3

Mounting bracket CK-26P
See page BCAS • BCAL-ACC-2

Cable gland
See cable gland pages

APPLICATION EXAMPLE

CONTROL BOX

INCLINOMETER for Bridge Construction

Product by Akasakatec Inc. (Japan)

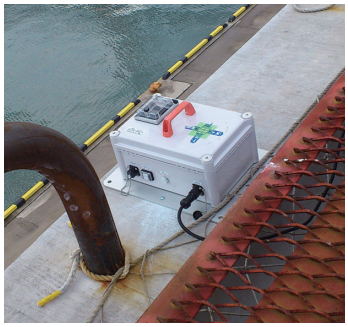

BMP-Z SERIES STEEL MOUNTING PLATE

▪ DXF/DWG/PDF drawings available on our website.

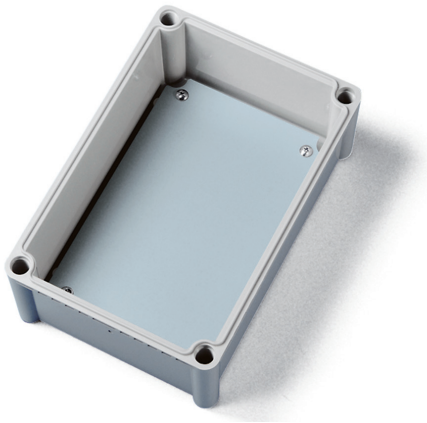

BMP1919Z ~ 2838Z

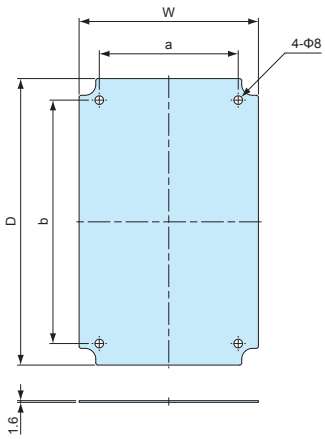

BMP2856Z ~ 3856Z

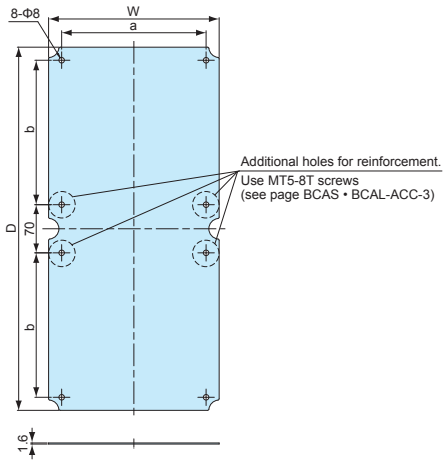

- Strong but easily customizable.
- Material/Finish : Steel t=1.6mm / Zinc coated

Product no. / Dimensions

Product no.	W	D	a	b	Suitable box	Weight (g)
BMP1919Z	159	159	120	120	BCAL191913	303
BMP1928Z	157	247	120	210	BCAL192813, 192818	462.5
BMP1938Z	159	347	120	310	BCAL193813, 193818	676.5
BMP2828Z	246	246	210	210	BCAL282813	727.5
BMP2834Z	246	306	210	270	BCAL283413	920
BMP2838Z	246	346	210	310	BCAL283813, 283818	1,018
BMP2856Z	248	528	210	210	BCAL285613	1,571
BMP3856Z	348	528	310	210	BCAL385618	2,210

BMP-P SERIES PLASTIC MOUNTING PLATE

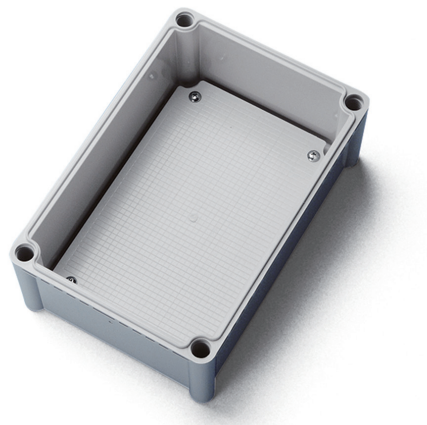

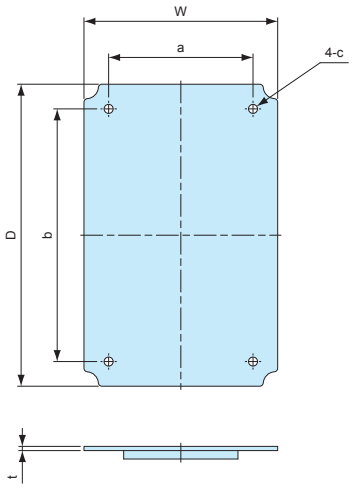

- Not available for BCAL283413, 285613, and 385618 models.
- Material/Color : ABS / White gray

Product no. / Dimensions

Product no.	W	D	a	b	c (Φ)	t	Suitable box	Weight (g)
BMP1919P	159	159	120	120	Φ8	4	BCAL191913	104
BMP1928P	158.5	248	120	210	Φ8	3.5	BCAL192813, 192818	162
BMP1938P	159	348	120	310	Φ8	4.5	BCAL193813, 193818	236
BMP2828P	248.5	248.5	210	210	Φ8	4	BCAL282813	237
BMP2838P	248	347.5	209	309.5	Φ8	4	BCAL283813, 283818	368

BCH SERIES HINGE for BCAS • BCAL

■ Refer to ◎ guide markings on BCAS • BCAL box when installing.

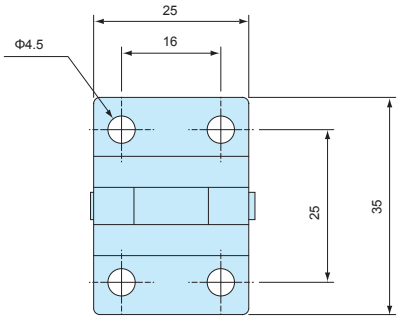

BCH55

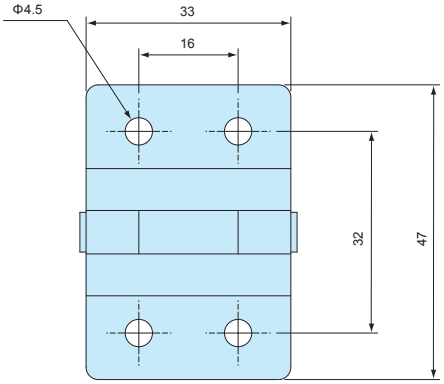

BCH65

Components

Part name	Pcs	Material	Color / Finish
Hinge	1	Stainless steel SUS304	Unfinished
Bracket	2	Stainless steel SUS304	Unfinished
Gasket	2	EPDM	Black

Product no. / Suitable box

Product no.	Suitable box	Included screw
BCH55	BCAS series Not available for BCAS050604, 050605, 060905, 071005, 080806, 081104, 101807, 102007, 102307, 152004, and 161607 models.	Truss head M4-10
BCH65	BCAL series	Truss head M4-10

BCL SERIES LATCH for BCAS • BCAL

■ Refer to ◎ guide markings on BCAS • BCAL box when installing.

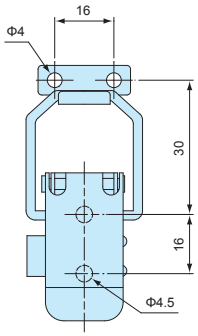

BCL55

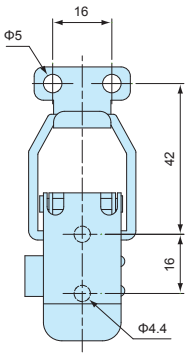

BCL65

Components

Part name	Pcs	Material	Color / Finish
Latch	1	Stainless steel SUS304	Unfinished
Hook	1	Stainless steel SUS304	Unfinished
Bracket	2	Stainless steel SUS304	Unfinished
Gasket	2	EPDM	Black

Product no. / Suitable box

Product no.	Suitable box	Included screw
BCL55	BCAS series Not available for BCAS050604, 050605, 060905, 071005, 080806, 081104, 101807, 102007, 102307, 152004, and 161607 models.	Truss head M4-10
BCL65	BCAL series	Truss head M4-10

BCM SERIES BLIND PLUG for BCAS • BCAL

■ Blind plug for BCAS • BCAL when installing hinges and latches.
Not usable when using cover screws.

Components

Part name	Material	Color
Blind plug	ABS	White gray

Product no. / Suitable box

Product no.	Suitable box	Pack of
BCM-1	BCAS series (Not available for BCAS050604, 050605 models)	1
BCM-2	BCAL series	1

CK SERIES STAINLESS STEEL MOUNT BRACKET

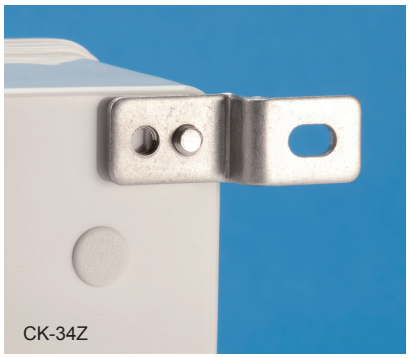

CK-34Z dimensions

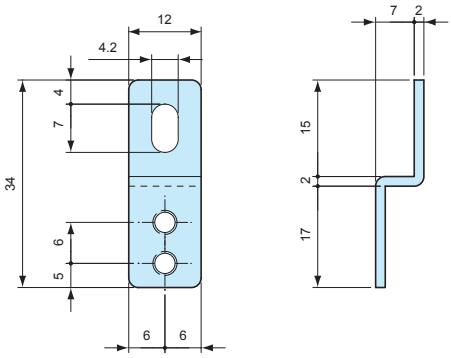

CK-35P dimensions

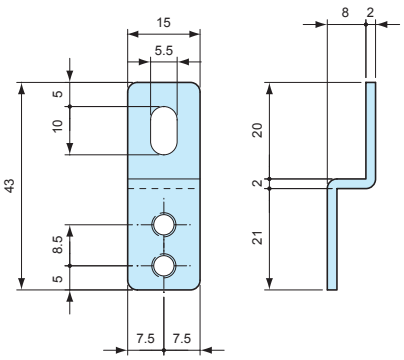

CK-26P dimensions

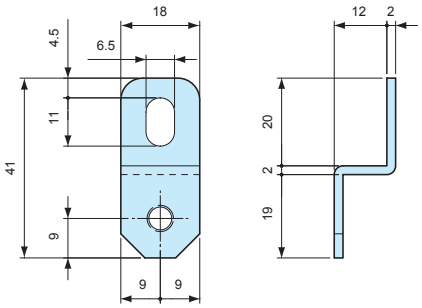

■ CK-34Z model requires the use of MT4-10 screw.

Product no. / Suitable box

Product no.	Material	Finish	Suitable box	Included screw	Pack of
CK-34Z	Stainless steel SUS304	Barrel finish	BCAS series (Not applicable for BCAS050604, 050605 models)	–	4
CK-35P	Stainless steel SUS304	Barrel finish	BCAS050604G, BCAS050605G	Pan head tapping M4-10	4
CK-26P	Stainless steel SUS304	Barrel finish	BCAL series	Pan head M5-10	4

MT4-10 MOUNTING SCREW

■ Use together with CK-34Z.

Product no. / Feature

Product no.	Material	Finish	Pack of
MT4-10 (Pan head M4-10)	Stainless steel	Unfinished	4

MT SERIES PCB MOUNTING SCREW

■ Mounting screw for the bosses without insert-nut.

Product no. / Feature

Product no.	Material	Finish	Pack of
MT4-8T (Binding head tapping M4-8)	Steel	Trivalent chromate	20
MT5-8T (Binding head tapping M5-8)	Steel	Trivalent chromate	20

Suitable box chart

Product no.	Suitable box	Tightening torque
MT4-8T	BCAS071005, 081104, 081107, 081108, 081110, 081307, 081308, 081807, 081808, 082507, 082508, 101007, 101010, 101807, 102007, 102307, 121207, 121210, 141709, 142309, 151507, 151510, 152004, 152007, 152010, 152013, 152016, 152510, 152513, 161607, 202010, 202013, 202016, 202019, and 212310 models.	0.7N • m
MT5-8T	BCAL series	1.4N • m

CB SERIES SPARE COVER SCREW for BCAS

CB20 CB35 CB50

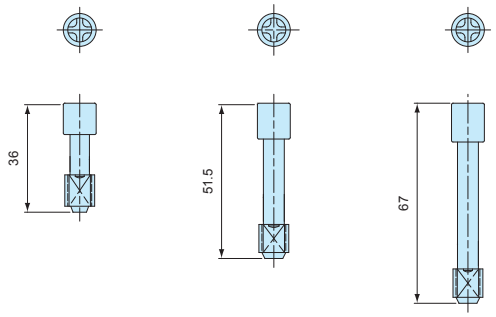

CB20 CB35 CB50

Product no. / Feature / Suitable box

Product no.	Material	Color	Pack of
CB20	Fiblerglass • Nylon	White gray	1
CB35	Fiblerglass • Nylon	White gray	1
CB50	Fiblerglass • Nylon	White gray	1

Product no.	Suitable box
CB20	BCAS060905, 071005, 080806, 081104, 081107, 081108, 081307, 081807, 082507, 101007, 101010, 101807, 102007, 102307, 121207, 121210, 141709, 142309, 151507, 151510, 152004, 152007, 152010, 152013, 152510, 161607, 202010, 202013, 202016, and 212310 models TMB-15PS, 20P, 20PL
CB35	BCAS081110, 081308, 081808, and 082508 models
CB50	BCAS152016, 152513, and 202019 models

CB SERIES SPARE COVER SCREW for BCAL

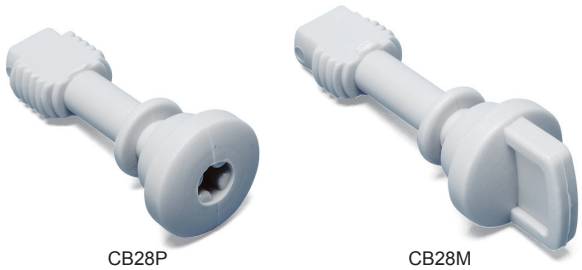

CB28P CB28M

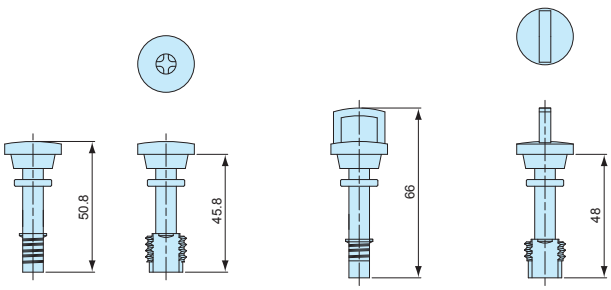

CB28P CB28M

Product no. / Feature / Suitable box

Product no.	Material	Color	Suitable box	Pack of
CB28P	Fiblerglass • Nylon	White gray	BCAL series	1
CB28M	Fiblerglass • Nylon	White gray	BCAL series	1

SSK SERIES POLE MOUNTING BRACKET

- Stainless steel pole mounting bracket for SPCM • SPCP and BCAL • BCAS series.
- Easy pole mount with the use of SSK-B mounting screw and PKB mounting belt.
- DXF/DWG/PDF drawings available on our website.
- SSK-P models includes plastic mounting brackets.

PKB series

SSK dimensions

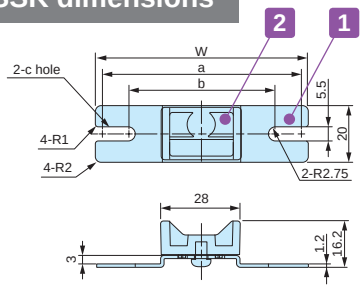

SSK-P50 • 60 • 75 • 80

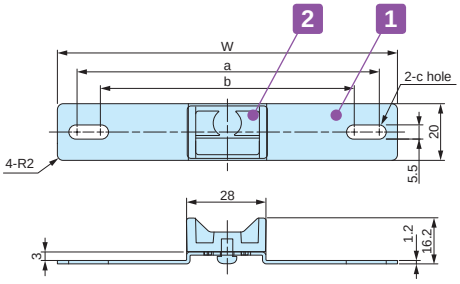

SSK-P100 • 120

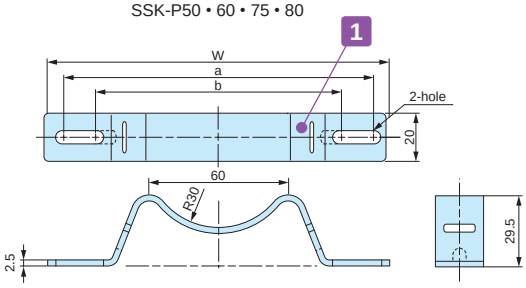

SSK-160 ~ 250

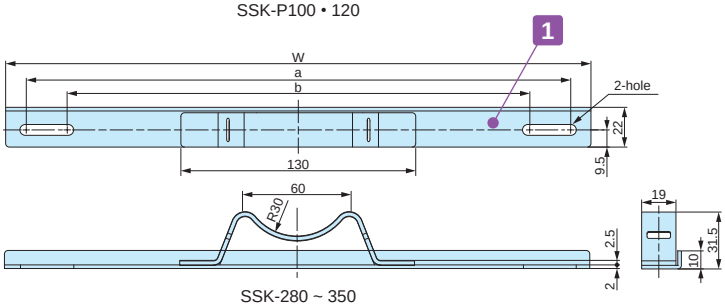

SSK-280 ~ 350

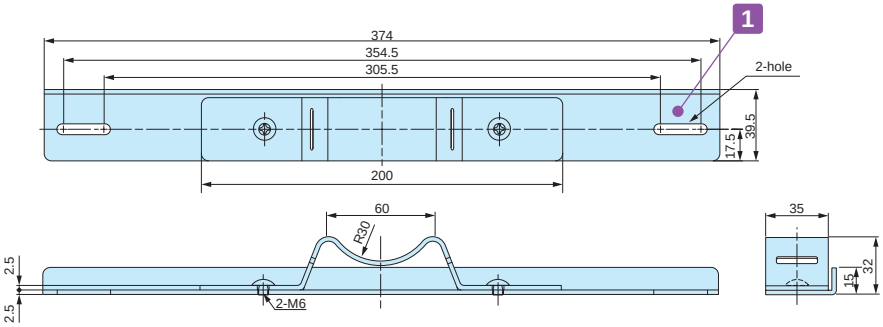

SSK-400

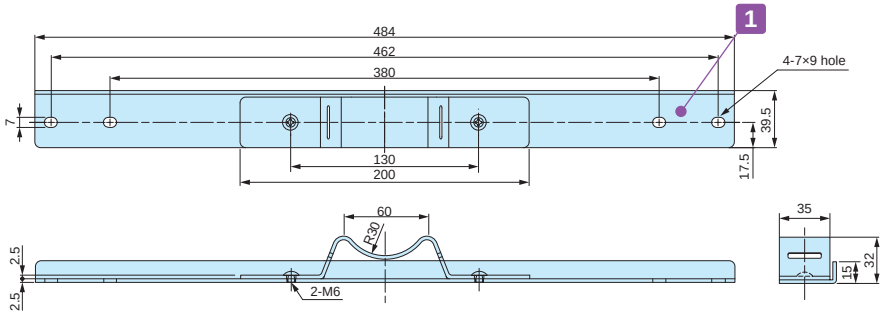

SSK-530

Components

No.	Part name	Pcs	Material	Color / Finish
1	Bracket	2	Stainless steel SUS304	Barrel finish
2	Plastic bracket (SSK-P models only)	2	ASA UL94HB	White gray

■ Screws included with SSK brackets are for BCAP • BCAR • BCPK • BCPR series use only. For other series, please utilize SSK-B screw set.

Product no. / Dimensions

Product no.	W	a	b	c	Suitable mounting belt	Pack of
SSK-P50	50	44.5	37.5	5.5× 9	PKB-10PM, 10P PKB-10S	2
SSK-P60	60	54.5	47.5	5.5× 9	PKB-10PM, 10P PKB-10S	2
SSK-P75	75	69.5	55.5	5.5×12.5	PKB-10PM, 10P PKB-10S	2
SSK-P80	80	74.5	64.5	5.5×10.5	PKB-10PM, 10P PKB-10S	2
SSK-P100	100	88.1	76.5	5.5×11.3	PKB-10PM, 10P PKB-10S	2
SSK-P120	120	106.5	88.5	5.5×14.5	PKB-10PM, 10P PKB-10S	2
SSK-160	142	129.5	106.5	–	PKB-10PM, 10P PKB-10S	2
SSK-170	152	142.3	101	–	PKB-10PM, 10P PKB-10S	2
SSK-200	174	161.5	112.5	–	PKB-10PM, 10P PKB-10S	2
SSK-210	192	180.5	131.5	–	PKB-10PM, 10P PKB-10S	2
SSK-250	230	215.5	166.5	–	PKB-10PM, 10P PKB-10S	2
SSK-280	260	244.5	195.5	–	PKB-10PM, 10P PKB-10S	2
SSK-300	280	264.5	215.5	–	PKB-10PM, 10P PKB-10S	2
SSK-350	324	302.5	253.5	–	PKB-10PM, 10P PKB-10S	2
SSK-400	374	354.5	305.5	–	PKB-20S	2
SSK-530	484	462	380	7×9	PKB-20S	2

SSK-B SERIES MOUNTING SCREW SET for SSK

NEW SIZE

■ Mounting screw set for use with SSK pole mounting bracket.
■ See chart on page SSK-3 for appropriate bracket/screw/box combination.
■ Material / Finish : Stainless steel / Unfinished.

Product no. / Dimensions

Product no.	Included screws	Suitable box	Pcs
SSK-B4-15N	M4-15 Pan head with nut	BCAS060905 ~ 212310	4
SSK-B4-25N	M4-25 Pan head with nut	SPCP • SPCM series	4
SSK-B5-10	M5-10 Pan head	BCAL series	4

■ Installation Example

BCAS050604, 050605

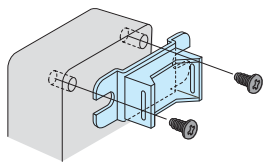

Use screws included with SSK-P

M4 / M5 Pan head with nut fastening

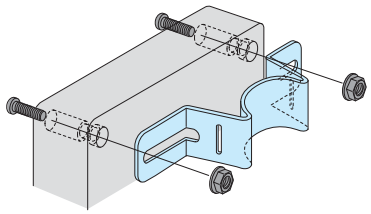

SSK-B4-15N SSK-B4-25N

Pan head screw into insert nut

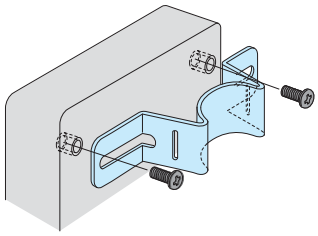

SSK-B5-10

POLE MOUNTING BRACKET / SCREW SET MATCHING CHART

SPCM • SPCP series

Box Product no.		SSK Product no.		Screw set Product no.
		Vertical mount	Horizontal mount	
SPCP SPCM	081304, 081305 081306, 081308 081310, 081313	SSK-P75	SSK-160	SSK-B4-25N
	101004, 101006	SSK-P100	SSK-P100	SSK-B4-25N
	131304, 131305 131306, 131308 131310, 131313	SSK-160	SSK-160	SSK-B4-25N
	131804, 131805 131806, 131808 131810, 131813, 131815	SSK-160	SSK-200	SSK-B4-25N
	181808, 181810 181813, 181815	SSK-200	SSK-200	SSK-B4-25N
	182508, 182510, 182515	SSK-200	SSK-280	SSK-B4-25N

BCAL series

Box Product no.		SSK Product no.		Screw set Product no.
		Vertical mount	Horizontal mount	
BCAL	191913 ※	SSK-P120	SSK-200	SSK-B5-10
	192813, 192818	SSK-200	SSK-250	SSK-B5-10
	193813, 193818	SSK-200	SSK-350	SSK-B5-10
	282813	SSK-250	SSK-280	SSK-B5-10
	283413	SSK-280	SSK-280	SSK-B5-10
	283813, 283818	SSK-280	SSK-350	SSK-B5-10
	285613	SSK-280	SSK-530	SSK-B5-10
	385618	SSK-400	SSK-530	SSK-B5-10

※Use screws included with SSK bracket for vertical mount

BCAS series

Box Product no.		SSK Product no.		Screw set Product no.
		Vertical mount	Horizontal mount	
BCAS	050604, 050605	SSK-P50	SSK-P60	Use screws included with SSK bracket
	060905	SSK-P60	SSK-P100	SSK-B4-15N
	071005 ※	SSK-P75	SSK-P100	SSK-B4-15N
	080806	SSK-P75	SSK-P75	SSK-B4-15N
	081104, 081107 081108, 081110	SSK-P75	SSK-P120	SSK-B4-15N
	081307, 081308	SSK-P75	SSK-160	SSK-B4-15N
	081807, 081808	SSK-P75	SSK-210	SSK-B4-15N
	082507, 082508	SSK-P75	SSK-280	SSK-B4-15N
	101007, 101010	SSK-P100	SSK-P100	SSK-B4-15N
	101807	SSK-P100	SSK-210	SSK-B4-15N
	102007	SSK-P100	SSK-250	SSK-B4-15N
	102307	SSK-P100	SSK-250	SSK-B4-15N
	121207, 121210	SSK-P120	SSK-200	SSK-B4-15N
	141709	SSK-160	SSK-200	SSK-B4-15N
	142309	SSK-160	SSK-250	SSK-B4-15N
	151507, 151510	SSK-170	SSK-170	SSK-B4-15N
	152004, 152007 152020, 152013, 152016	SSK-170	SSK-250	SSK-B4-15N
	152510, 152513	SSK-170	SSK-280	SSK-B4-15N
	161607	SSK-170	SSK-170	SSK-B4-15N
	202010, 202013 202016, 202019	SSK-250	SSK-250	SSK-B4-15N
	212310	SSK-250	SSK-250	SSK-B4-15N

※Use screws included with SSK bracket for vertical mount

■ **For installation of SR series outdoor roof on SPCM • SPCP series**

SR series (For SPCM • SPCP - see page SPCP • SPCM-ACC-2)

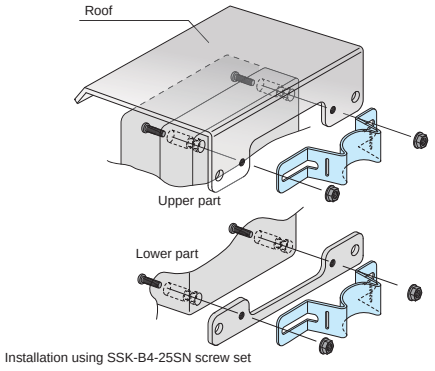

■ **Select SSK bracket depending on mounting type (Vertical or Horizontal).**

Vertical mount
(Longer vertical side)

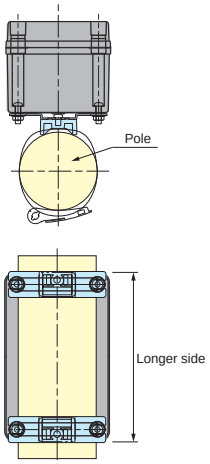

Horizontal mount
(Longer horizontal side)

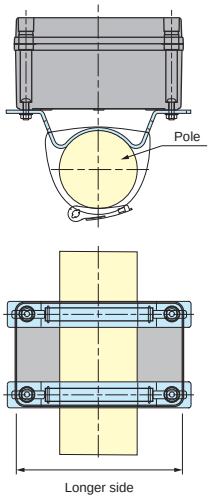

WPMB-M4-3 series POLE MOUNTING BRACKET

- Pole mount bracket made from weather resistant ASA material.
- Suitable for both vertical and horizontal mounting.
- IPX7 protection can be maintained through the use of sealing washers.
- Hole milling is required for bracket installation.
- Pole mount is possible with the use of PKB series mounting belt. (see page 324 for PKB series)

WPMB-M4-3 dimensions

- DXF/DWG/PDF/STP drawings available on our website.

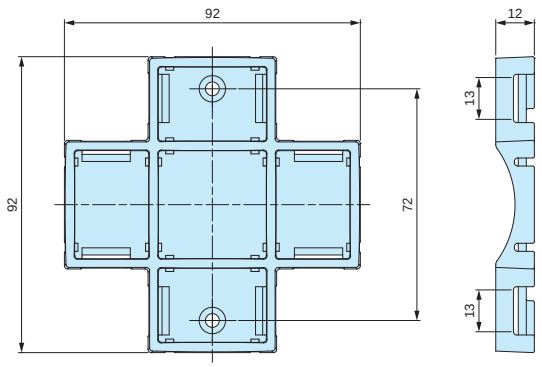

Installation

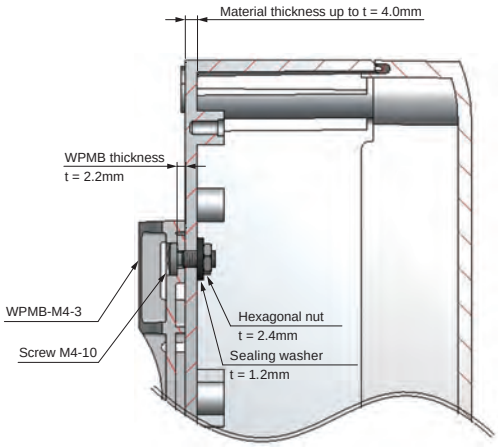

Components

No.	Part name	Pcs	Material	Color / Finish
1	Bracket	1	ASA UL94HB	White gray • Dark gray
2	Sealing washer	2	NBR, SPCC	Black
3	Screw (M4-10 Pan head)	2	Stainless steel	Unfinished
4	Hexagonal nut (M4 - JIS Type 3)	2	Stainless steel	Unfinished

Product no. / Dimensions

Product no.		Material thickness to install	Recommended torque	Max load (kg)	Weight (g)
White gray	Dark gray				
WPMB-M4-3G	WPMB-M4-3D	Up to t = 4.0mm	0.45N • m	5	26.5

- Recommended torque listed is for reference only; actual may differ. Assemble after testing torque.

FDR SERIES DIN-RAIL

NEW SIZE

- DIN rail for installation of terminals, relays or switches inside enclosures.
- Available in different models and lengths to fit a wide variety of mounting boss pitch.
- FDR-1000 is available if customized length is required.

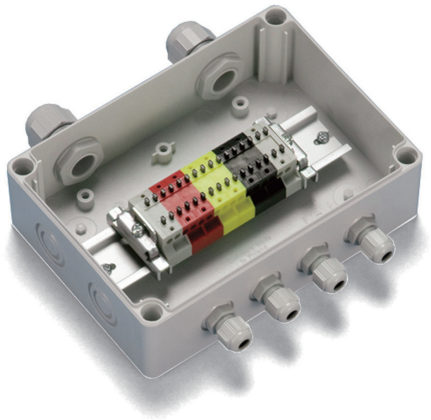

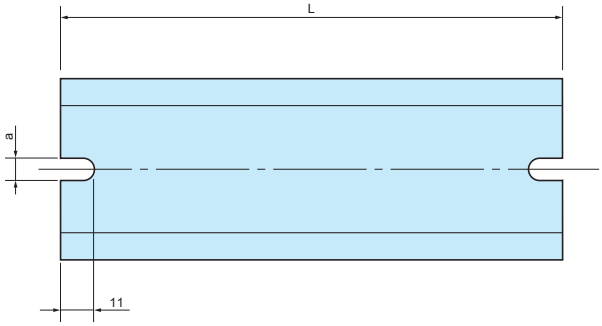

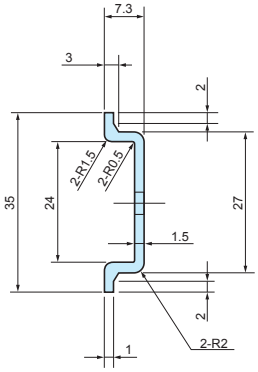

Feature

Material	Finish
Extruded Aluminium A6063S-T5	Silver anodized

Product no. / Dimensions

Product no.	L	a	Matching boss pitch
FDR- 50	50	4.2	32 ~ 42
57	57	4.2	39 ~ 49
66	66	4.2	48 ~ 58
77	77	4.2	59 ~ 69
80	80	4.2	62 ~ 72
87	87	4.2	69 ~ 79
92	92	4.2	74 ~ 84
100	100	4.2	82 ~ 92
106	106	4.2	88 ~ 98
110	110	4.2	92 ~ 102
120	120	4.2	102 ~ 112
128	128	4.2	110 ~ 120
137	137	4.2	119 ~ 129
142	142	4.2	124 ~ 134
146	146	4.2	128 ~ 138
150	150	4.2	132 ~ 142
168	168	4.2	150 ~ 160
170	170	4.2	152 ~ 162
186	186	4.2	168 ~ 178
202	202	4.2	184 ~ 194
205	205	4.2	187 ~ 197
223	223	4.2	205 ~ 215
226	226	4.2	208 ~ 218
235	235	4.2	217 ~ 227
242	242	4.2	224 ~ 234
249	249	4.2	231 ~ 241
283	283	4.2	265 ~ 275
300	300	4.2	282 ~ 292
350	350	4.2	332 ~ 342
450	450	4.2	432 ~ 442
550	550	4.2	532 ~ 542

Product no.	L	a	Matching boss pitch
FDR-B102	102	6.5	86 ~ 92
NEW B124	124	6.5	108 ~ 114
B142	142	6.5	126 ~ 132
B160	160	6.5	144 ~ 150
B165	165	6.5	149 ~ 155
B176	176	6.5	160 ~ 166
B183	183	6.5	167 ~ 173
B223	223	6.5	207 ~ 213
B260	260	6.5	244 ~ 250
B283	283	6.5	267 ~ 273
B303	303	6.5	287 ~ 293
B338	338	6.5	322 ~ 328
B360	360	6.5	344 ~ 350
B376	376	6.5	360 ~ 366
B383	383	6.5	367 ~ 373
B463	463	6.5	447 ~ 453
B560	560	6.5	544 ~ 550
B623	623	6.5	607 ~ 613
FDR-1000	1000	–	–

- FDR-1000 does not have mounting holes.

Matching DIN-Rail Chart

BC□□ series

Product no.		Matching DIN-Rail
BCAP BCPC BCPK BCAR BCPR	091207	FDR - 80
	091208	80
	101507	110
	101508	110
	112107	170
	112110	170
	112607	223
	112610	223
	131508	120
	131808	150
	131810	150
	151509	120
	151512	120
	162110	170
	162113	170
	162610	223
	162613	223
	172211	170
	172711	223

BDN series

Product no.		Matching DIN-Rail
BDN	6- 8- 5	FDR - 50
	7-10- 4	–
	9- 9- 6	FDR - 80
	9-13- 5	120
	10-14- 7	128
	11-16- 6	150
	12-22- 8	205
	16-26- 9	242

BCAS series

Product no.		Matching DIN-Rail
BCAS	071005	FDR - 92
	080806	66
	081104	92
	081107	92
	081108	92
	081110	92
	081307	110
	081308	110
	081807	168
	081808	168
	082507	235
	082508	235
	101007	77
	101010	77
	101807	150
	102007	170
	102307	202
	121207	80
	121210	80
	141709	146
	142309	205
	151507	120
	151510	120
	152004	170
	152007	170
	152010	170
	152013	170
	152016	170
	152510	226
	152513	226
	161607	137

SPCM • SPCP series

Product no.		Matching DIN-Rail
SPCM SPCP	081304	FDR - 50/100
	081305	50/100
	081306	50/100
	081308	50/100
	081310	50/100
	081313	50/100
	101004	80
	101006	80
	131304	100
	131305	100
	131306	100
	131308	100
	131310	100
	131313	100
	131804	100/150
	131805	100/150
	131806	100/150
	131808	100/150
	131810	100/150
	131813	100/150
	131815	100/150
	181808	150
	181810	150
	181813	150
	181815	150
	182508	150/223
	182510	150/223
	182515	150/223

Accessories (Optional parts)

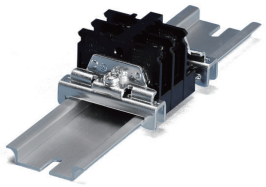

DIN-Rail stopper bracket TKR series
See page DIN-ACC-2

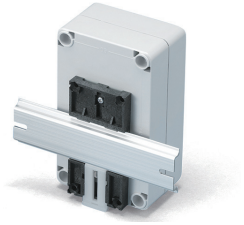

DIN-Rail mounting base DRA series
See page DIN-ACC-1

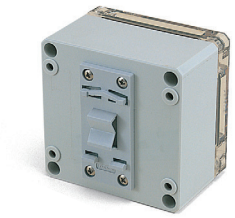

DIN-Rail mounting base DRT series
See page DIN-ACC-1

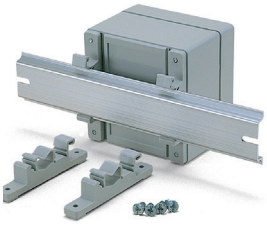

DIN-Rail mounting feet CKD series
See page DIN-ACC-2

DRA series DIN-RAIL MOUNTING BASE

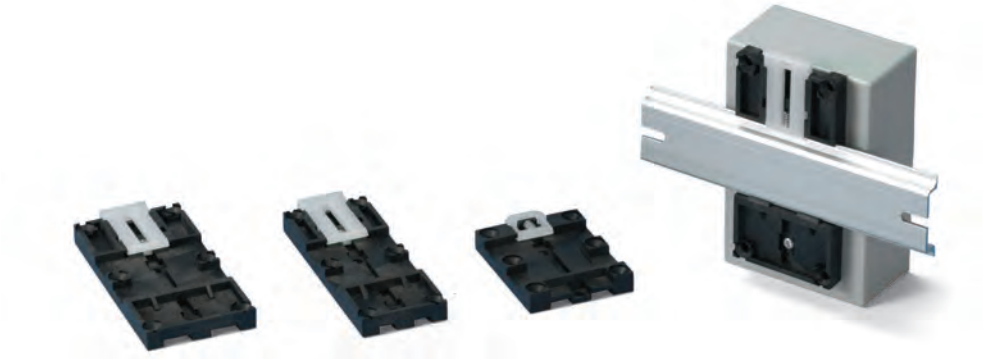

■ For installation of enclosures, PCB and other parts onto a DIN rail.
■ Simple installation and removal via the pull lever.

■ **NOTE**

Before installation, please ensure that the lever is not fully hidden behind the enclosure

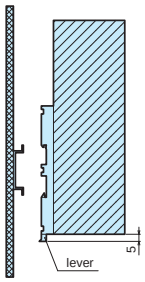

Technical Data
Max load : 5kg

DRA dimensions

DRA-1

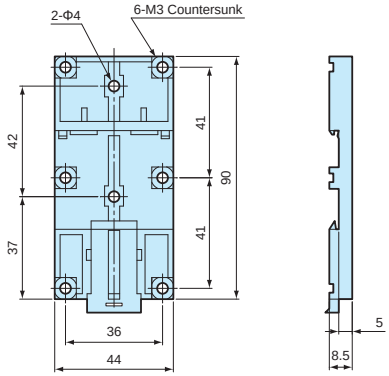

DRA-2

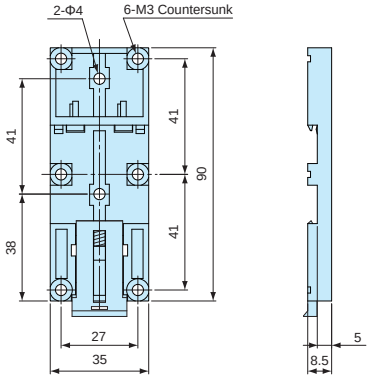

DRA-3

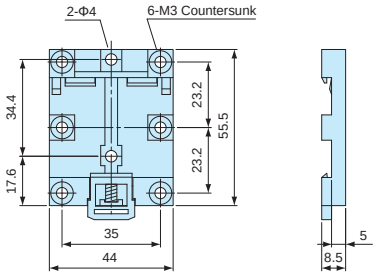

■ DXF/DWG/PDF drawings available on our website.

Product no. / Dimensions

Product no.	Material (body)	Material (lever)	Color	Weight (g)
DRA-1	PPE : SB UL94V-1	Nylon 66 UL94V-2	Black : White	16.4
DRA-2	PPE : SB UL94V-1	Nylon 66 UL94V-2	Black : White	14.5
DRA-3	PPE : SB UL94V-1	Nylon 66 UL94V-2	Black : White	10.4

DRT series DIN-RAIL MOUNTING BASE

DRT dimensions

■ DXF/DWG/PDF drawings available on our website.

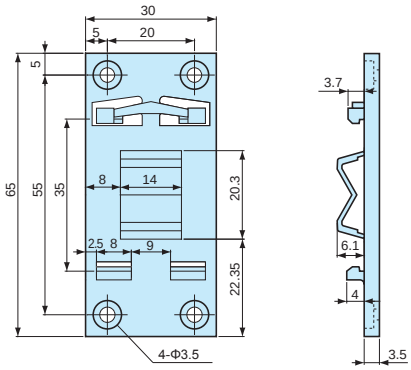

■ **NOTE**

Before installation, please ensure that the length (from top) of the enclosure is equal to, or less than 100mm from the center of the mounting base.

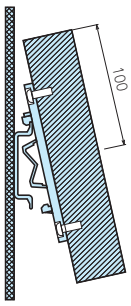

■ For installation of enclosures, PCB and other parts onto a DIN rail.
■ Simple installation and removal by tilting the case at an angle and sliding it in/out.

Technical Data
Max load : 1kg Operating temperature: -20°C ~ +70°C

Product no. / Dimensions

Product no.	Material	Color	Weight (g)
DRT-1	PC/ABS UL94V-0	Light gray	7.3

CKD SERIES DIN-RAIL MOUNTING FEET

Installation example

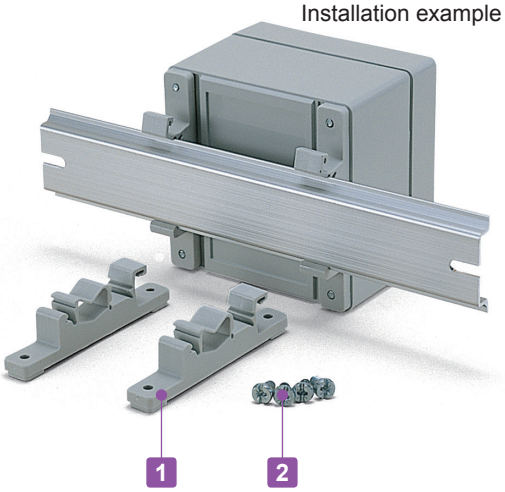

■ DXF/DWG/PDF drawings available on our website.

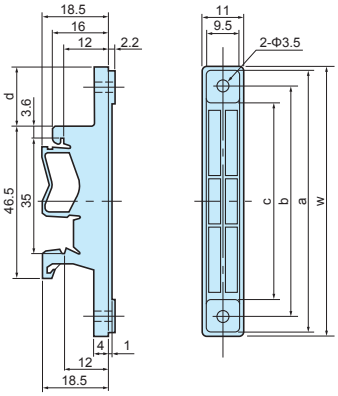

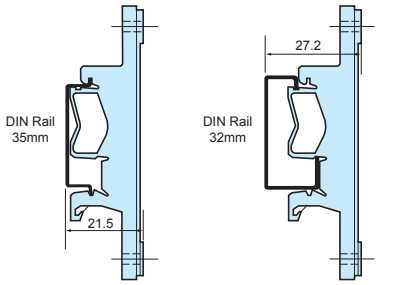

■ Mounting feet for installation of enclosures, PCB and other parts onto a DIN rail. Can be easily detached.

Technical Data
Max load : 3kg

Components

No.	Part name	Pcs	Material	Color / Finish
1	Mounting feet	2	Polyamide	White gray
2	Screw (special type 4.2 x 9.5)	4	Screw	Unichrome plated

Product no. / Dimensions

Product no.	W	a	b	c	d	Pack of
CKD- 80	77	75	66	56	17	2
CKD-120	117	115	106	96	37	2
CKD-160	157	155	147	136	57	2

TKR SERIES DIN-RAIL TERMINAL BLOCKS END STOPPER

■ DXF/DWG/PDF drawings available on our website.

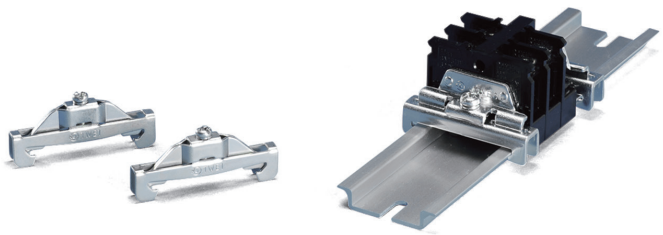

TKR-TWE1

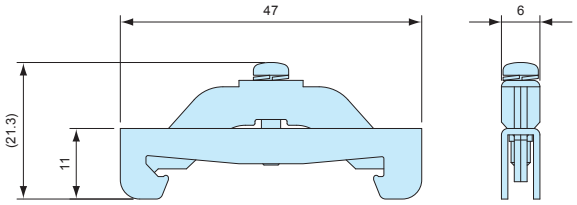

TKR-JTXE3

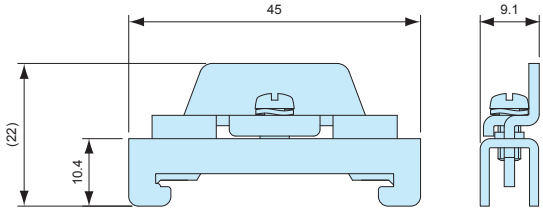

■ Stopper bracket for use with 35mm DIN-rail to keep an attachment at a fixed location.

■ TKR-TWE1 is used with small DIN rail attachment parts. For larger/ higher attachment parts, TKR-JTXE3 is recommended for providing additional support.

Product no. / Feature

Product no.	Material	Color / Finish	Pack of
TKR-TWE1	Steel sheet	Trivalent chromate	2
TKR-JTXE3	Steel sheet	Trivalent chromate	2

PMF-6B SMALL PROTECTIVE VENT

NEW

IP68

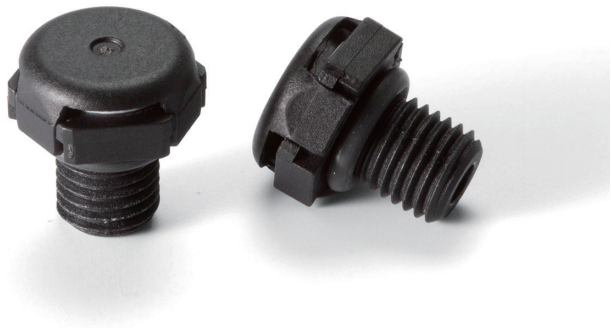

Application example

- Small and screw-in protective vent suitable for compact, and hand-held type devices.
- IP68 protection class (water depth 2 meters / 60 mins) and -40°C ~ +150°C operating temperature range allows it to be used in various environments.
- Suitable for enclosures with capacities of 2.0 litres or under.
- For outdoor use, installation on the side of the enclosure unit is recommended.

PMF-6B dimensions

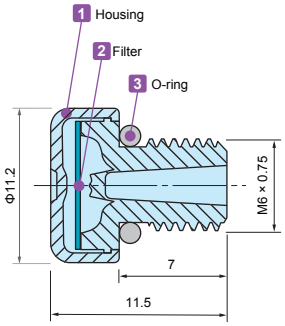

Hole milling drawings

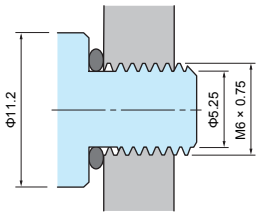

Installation drawings

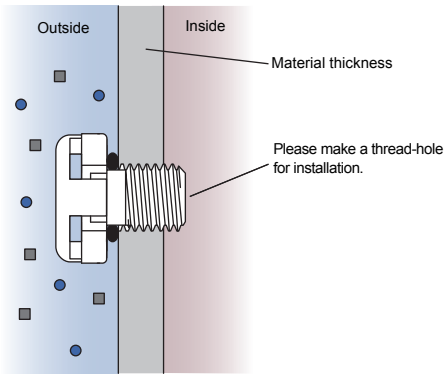

Technical Data

Airflow	300ml / min (dp = 7 kPa)
Recommended Torque	0.2 ~ 0.4 N • m
Certifications	IEC60529 (Protection class test) : IP66 • IP67 • IP68 IEC60068-2-1, 2, 14 (Heat resistance test) : -40°C ~ +150°C IEC60068-2-78 (Humidity test) : 85°C • 85% humidity • 1000 hours IEC60068-2-64 (Vibration test) UL94V-0 (Flame-resistant) • UL746C f1

Product no. / Dimensions

Product no.	Material			G	
● Black	1 Housing	2 Filter	3 O-ring	Thread size	Mount hole
PMF-6B	PA6 (Body) • PA66 (Cap)	PTFE	Silicone	M6 x 0.75	—

PMF-12M STAINLESS STEEL PROTECTIVE VENT

NEW

IP68 IP69K

- Stainless steel protective vent for superior durability and chemical resistance.
- IP68 protection class (water depth 2 meters / 60 mins) and -40°C ~ +125°C operating temperature range allows it to be used in various environments.
- Suitable for enclosures with capacities of 20 liters or under.
- For outdoor use, installation on the side of the enclosure unit is recommended.

PMF-12M dimensions

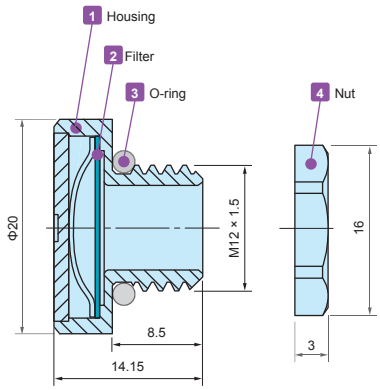

Hole milling drawings

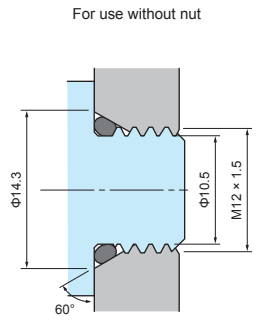

- While Φ12.2mm through-hole is sufficient for installation, 60° angle tapered hole is recommended to prevent deformation of the O-ring.

Installation drawings

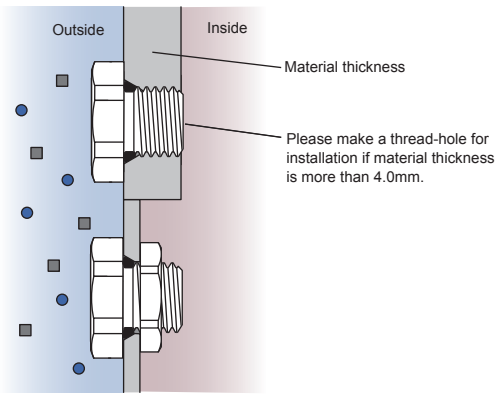

- If used with a lock nut, material thickness should not exceed 4.0mm.

Technical Data

Airflow	1600ml / min (dp = 7 kPa)
Recommended Torque	0.6 ~ 1.2 N • m
Certifications	IEC60529 (Protection class test) : IP66 • IP67 • IP68 • IP69K IEC60068-2-1, 2, 14 (Heat resistance test) : -40°C ~ +125°C IEC60068-2-78 (Humidity test) : 85°C • 85% humidity • 1000 hours IEC60068-2-64 (Vibration test)

Product no. / Dimensions

Product no.	Material				G		Nut SW
Metalic	1 Housing	2 Filter	3 O-ring	4 Nut	Thread size	Mount hole	
PMF-12M	Stainless steel	PTFE	Silicone	Brass • Nickel plated	M12 x 1.5	Φ12.2	15

PMF series PROTECTIVE VENT

Pressure Equalization / Ventilation

Application Example

- Protective vent protects the enclosure from deformation by equalizing internal and external pressure differences, as well as venting the gas generated within the enclosure.
- IP68 protection class (water depth 2 meters / 60 mins) with an operating temperature range -40°C ~ +125°C allows them to be used in harsh environments.
- PMF-6B model is suitable for enclosures with capacities of up to 2.0 liters. PMF-12 and PMF-12HS models are suitable for up to 5 and 50 liters respectively.
- Recommended to be installed at the sides of the enclosure.
- Use in industrial and electrical / electronic products only; not suitable to be used in medical, food and beverage, and cosmetic industries and related industrial equipment.

PMF dimensions

- DXF/DWG/PDF drawings available on our website.

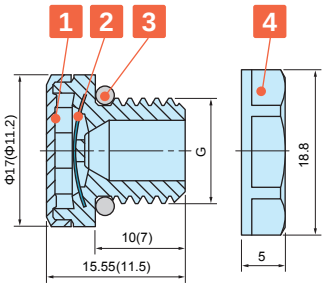

( ) values are for PMF-6B.
Lock nut is not available for PMF-6B

Hole milling drawings

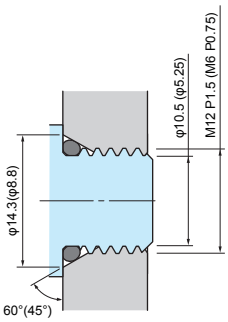

- Recommended for prevention of O-ring deformation during tightening.
  If tightened with a lock nut, a standard through-hole is sufficient for installation.

Installation drawings

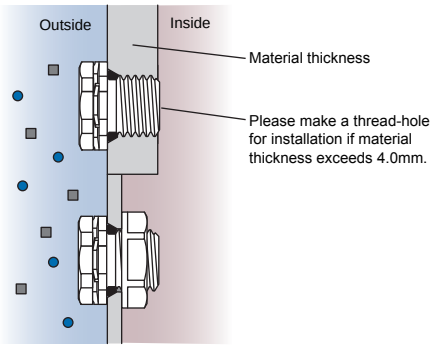

- If used with a lock nut, material thickness should not exceed 4.0mm.

Technical Data

Product no.	PMF-6B	PMF-12	PNF-12HA
Airflow	300ml / min (dp = 7kPa)	450ml / min (dp = 7kPa)	4,000ml / min (dp = 7kPa)
Recommended torque	0.2 ~ 0.4N • m	0.6 ~ 0.8N • m	0.6 ~ 0.8N • m
Certifications	IEC60529 (Protection class test) : IP65 • IP66 • IP67 • IP68 • IP69K (Not for PMF-6B) IEC60068-2-1, 2, 14 (Heat resistance test) : - 40°C ~ +125°C (~+150°C for PMF-6B) IEC60068-2-78 (Humidity test) : 85°C • 85% humidity • 1,000 hours IEC60068-2-11, 52 (Salt spray test) IEC60068-2-64 (Vibration test) GR-3108-CORE (Corrosive gas test) UL94V-0 (Flame-resistant) • UL746C f1		

Product no. / Dimensions

Product no.		Material				G		Lock nut SW
● Light gray	● Black	1 Housing	2 Filter	3 O-ring	4 Lock nut	Thread size	Mount hole	
—	PMF- 6B	PA6 / 66	PTFE	Silicone	—	M6 x P0.75	—	—
PMF-12S	PMF-12B	PA66 / 6	PTFE	Silicone	PA66 (UL94V-2)	M12 x P1.5	Φ12.2	17
PMF-12HAS	PMF-12HAB	PA66 / 6	PTFE	Silicone	PA66 (UL94V-2)	M12 x P1.5	Φ12.2	17

PMF-32S LARGE PROTECTIVE VENT

Pressure Equalization / Ventilation

IP68 IP69K

- Maintaining high airflow for large enclosures in an outdoor environment.
- Protective vent protects the enclosure from deformation by equalizing internal and external pressure differences, as well as venting the gas generated within the enclosure.
- Simple and flat design allows it to be used on a wide variety of enclosure types.
- IP68 protection class rated with an operating temperature range of -40°C ~ +125°C allows it to be used in harsh environments.
- Compliant with Solar industry testing IEC62108 standards.
- Recommended to be installed at the sides of the enclosure.
- Use in industrial and electrical / electronic products only; not suitable to be used in medical, food and beverage, and cosmetic industries and related industrial equipment.

PMF-32 dimensions

- DXF/DWG/PDF drawings available on our website.

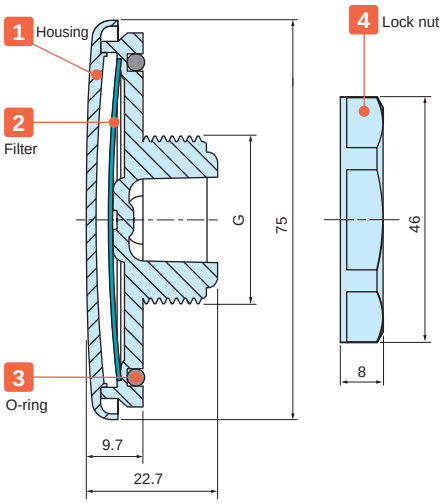

Hole milling drawings

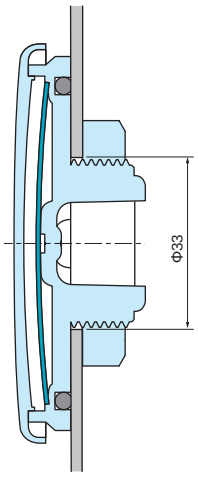

Installation drawings

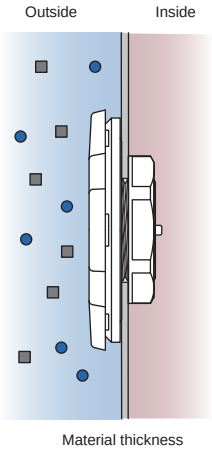

- If used with a lock nut, material thickness should not exceed 5.0mm.

Technical Data

Airflow	16ℓ / min (dp = 1.2kPa)
Recommended torque	5 N • m
Certifications	IEC529, 2nd (Protection class test) : IP66 • IP67 • IP68 • IP69K IEC60068-2-1, 2, 14 (Heat resistance test) : - 40°C ~ +125°C IEC60068-2-78 (Humidity test) : 85°C • 85% humidity • 1,000 hours IEC60068-2-11, 52 (Salt spray test) IEC60068-2-64 (Vibration test) IEC62108, 10.8 • 9 (Solar industry test) : Freezing • High temperature tes • Hail impact test GR-3108-CORE (Corrosive gas test) UL94V-0 (Flame-resistant) • UL746C f1

Product no. / Dimensions

Product no.	Material				G			Lock nut SW
	1 Housing	2 Filter	3 O-ring	4 Lock nut	Thread size	Thread diameter	Mount hole	
PMF-32S	Polycarbonate	PTFE	Silicone	PA66	M32 x P1.5	Φ32	Φ33	41.5

VE8 series ADHESIVE PROTECTIVE VENT FILTER NEW

Technical Data
Protection class : Dustproof IP6X Waterproof IPX4, IPX7 Airflow: 3,300ml/min/cm2 (at 7Kpa) Operating temperature: -40°C ~ +100°C

- Improved airflow of 3,300ml/min/cm2 as compared to previous VSC series.
- Vent filter protects the enclosure from deformation by equalizing internal and external pressure differences, as well as venting the gas generated within the enclosure.
- Allows water vapor molecules to diffuse through the microporous membrane.
- Highly water and oil repellent membrane protects electronic components from water, corrosive liquids, salts and dust.
- Easy installation adhesive filter.
- Recommended to be adhered onto flat plastic or metallic surfaces.

CAUTION

- Install only on the inner surface of the case / box with the membrane and adhesive side facing outwards.
- An initial period of 24 hours is required for the adhesive to properly bond to the surface. Avoid using the vent filter with a heavy load.
- Please do not adhere onto the top-side of enclosures. Rain water etc. will collect on the filter, which will weaken the adhesive seal and prevent proper ventilation.
- After degreasing and cleaning, adhere the filter without touching the center part of the vent filter.
- Use in industrial and electrical / electronic products only; not suitable to be used in medical, food and beverage, and cosmetic industries and related industrial equipment.

VE8 drawings

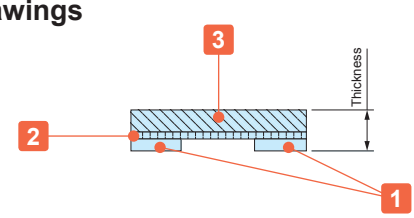

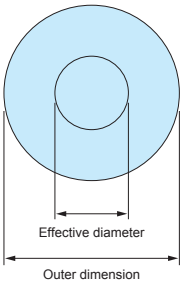

Installation drawings

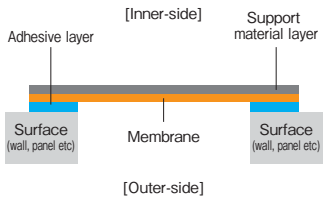

Adhesive type protective vent filter can be installed on any flat surface.

Components

No.	Part name	Material	Color
1	Adhesive	Acrylic adhesive	Transparent
2	Filter	ePTFE (Oil-repellent type)	White
3	Support material	Polyester fabric	White

Product no. / Dimensions

Product no.	Outer dimension (Φ·mm)	Effective diameter (Φ·mm)	Thickness (mm)	Sales unit
VE80308	7.6	3.3	0.26	8 pcs (per pack)
VE80814	14.0	8.0	0.26	4 pcs (per pack)
VE81221	21.5	12.5	0.26	4 pcs (per pack)
NEW VE82029S	29.0	20.0	0.35	2 pcs (per pack)
VE80308-S	7.6	3.3	0.26	96 pcs (per sheet)
VE80814-S	14.0	8.0	0.26	56 pcs (per sheet)
VE81221-S	21.5	12.5	0.26	20 pcs (per sheet)
NEW VE82029S-S	29.0	20.0	0.35	10 pcs (per sheet)

VSC SERIES ADHESIVE PROTECTIVE VENT FILTER

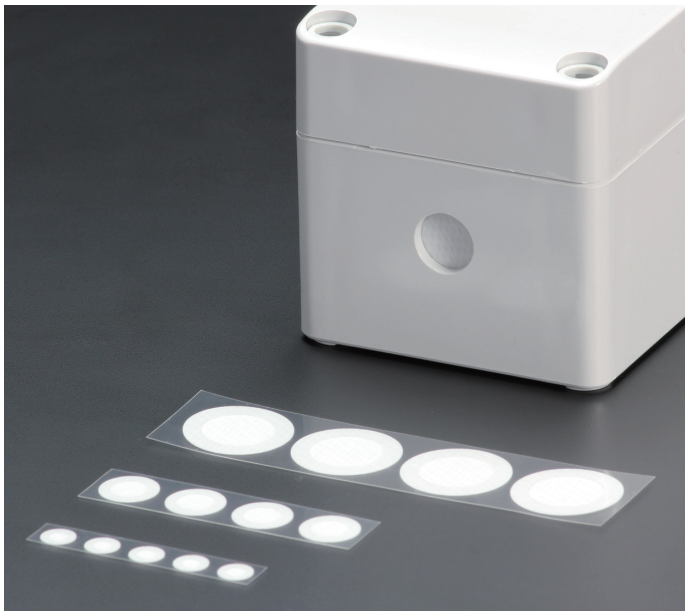

Technical Data
Water Entry Pressure (WEP): ≧ 20.0kPa Airflow: 450cc/cm^2 • min at 1.29Kpa

- Prevents ingression of a variety of contaminants, such as water, dust and other particles.
- Allows water vapor molecules to diffuse through the microporous membrane.
- Recommended to be adhered onto flat plastic or metallic surfaces.

NOTE

- Surface must be wiped dry before adhering.
- An initial period of a few hours is required for the adhesive to properly bond to the surface.
- Please do not adhere onto the top-side of enclosures. Rain water etc will collect on the filter, which will weaken the adhesive seal and prevent ventilation.

Drawing

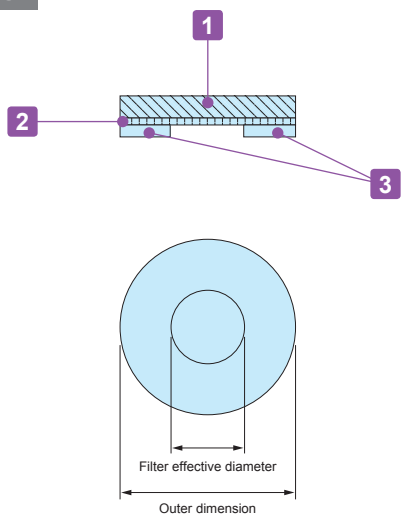

Installation drawing

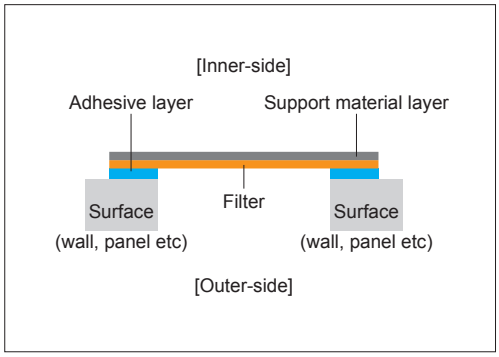

Components

No.	Part name	Material	Color
1	Adhesive	Acrylic adhesive	Transparent
2	Filter	PTFE	White
3	Support material	Polyester fabric	White

Product no. / Dimensions

Product no.	Outer dimension (Φ)	Filter effective diameter (Φ)	Thickness	Sales unit
VSC075	7.5	4.0	0.35	5 pcs (per pack)
VSC130	13.0	8.0	0.35	4 pcs (per pack)
VSC240	24.0	16.0	0.35	4 pcs (per pack)
VSC075-S	7.5	4.0	0.35	100 pcs (per sheet)
VSC130-S	13.0	8.0	0.35	56 pcs (per sheet)
VSC240-S	24.0	16.0	0.35	20 pcs (per sheet)

V series VENTILATION LOUVER

- Recommended for condensation prevention and heat dissipation.
- 2 models available : ABS V60, V80 match the color for BCAP and BCAR series, and polycarbonate V60S and V80S match the color for BCPC, BCPK, and BCAR series.
- Suitable to be used on a variety of enclosure types, series and models.

V dimensions

- DXF/DWG/PDF drawings available on our website.

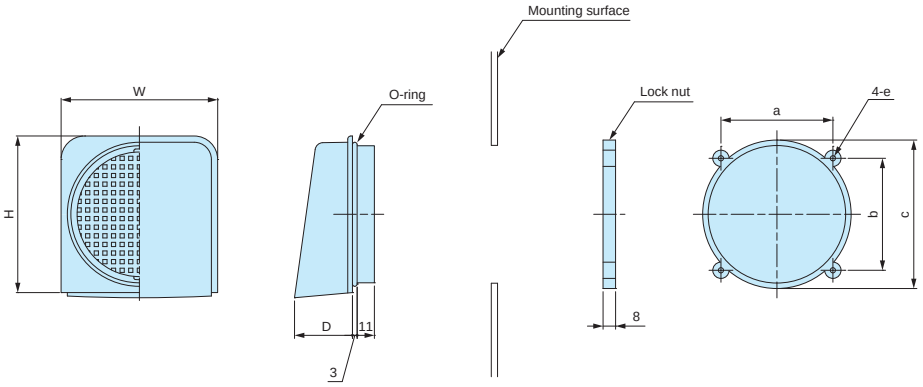

Product no. / Dimensions

Product no.	Material	Color	Mount hole	W	H	D	a	b	c	e
V60	ABS	White gray	Φ63	74	74	31.8	50.5	50.5	70	Φ3.8
V80	ABS	White gray	Φ88	100	100	37	71.5	71.5	94.8	Φ3.3
V60S	Polycarbonate	Light gray	Φ63	74	74	31.8	50.5	50.5	70	Φ3.8
V80S	Polycarbonate	Light gray	Φ88	100	100	37	71.5	71.5	94.8	Φ3.3

- O-ring material : NBR / Black

VF series VENTILATION PARTS

VF dimensions

- DXF/DWG/PDF drawings available on our website.

VF-1

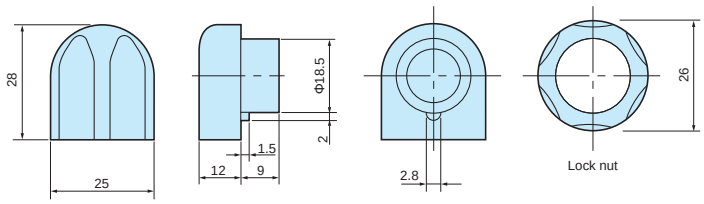

Hole layout for mounting

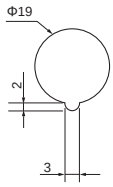

VF-2

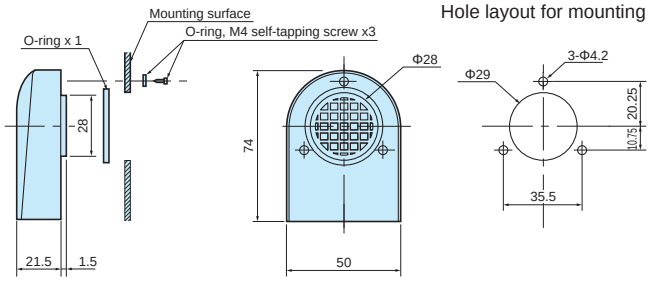

Hole layout for mounting

Technical Data
Protection class : VF-1 IP33 VF-2 IP24

Product no. / Dimensions

Product no.	Material / Color
VF-1	Polyamide / White gray
VF-2	Polyamide / White gray

BCSB series IP65 PLASTIC SWITCH BOX

NEW

Technical Data
Protection class : IP65 {Waterproof switch / Exclusive cable gland} required Operating Temperature : -20°C ~ +75°C Recommended torque : 1N • m ~ 1.5N • m

IP65

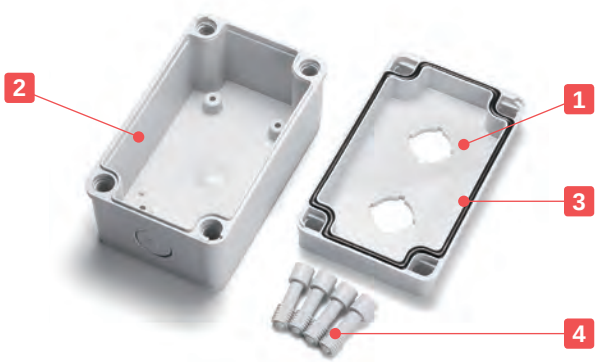

- IP65 switch box with 1 ~ 4 Φ22 hole(s) on the top cover.
- Made from flame retardant UL94V-0 high heat resistant polycarbonate material.
- Φ22 knock-outs on 2 opposite ends for easy wiring access if required.
- Exclusive cable gland, B131210G for Φ22 knock-outs is available as optional parts.
- IP65 protection class is maintained with waterproof switches and the exclusive cable glands installed.
- Yellow/Black color types available as BTO (built-to-order) at a MOQ of 500 pcs.

  For custom color order, the material would be changed to ABS UL94HB, with an operating temperature of -10°C ~ +60°C.

Components

No.	Part name	Pcs	Material	Color / Finish
1	Top cover	1	Polycarbonate UL94V-0	Light gray
2	Base	1	Glass fiber filled polycarbonate UL94V-0	Light gray
3	Gasket	1	Polyurethane	Black
4	Cover screw	4	Glass fiber filled nylon	White gray

Accessories (Optional parts)

Exclusive cable gland B131210G
See page 330

Stainless steel mounting bracket CK-34Z
See website

Spare cover screw CB20
See website

PCB mounting screw MT4-8T
See page 320

BCSB dimensions

■ DXF/DWG/PDF drawings available on our website.

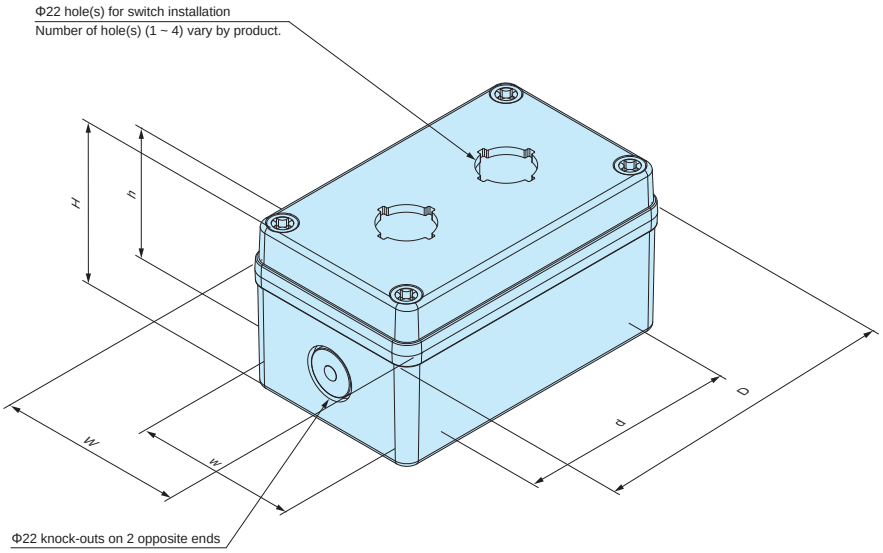

■ Wall mounting without an optional wall mounting bracket is possible through inserting the wall mount screw directly into the cover screw hole on the base part.

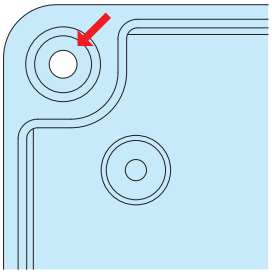

Product no. / Dimensions

Product no.	External dimensions			Internal dimensions			Switch hole(s)	Knock-outs	Weight (g)
	W	D	H	w	d	h			
BCSB081107-2201G	80	110.5	70.3	67	67	55.8	Φ22 x 1	Φ22 x 2	204
BCSB081307-2202G	80.5	130.5	70	67	87	55.6	Φ22 x 2	Φ22 x 2	222
BCSB081807-2203G	80	180	70.5	67	137	56.3	Φ22 x 3	Φ22 x 2	278
BCSB082507-2204G	80	250	71	67	207	56.3	Φ22 x 4	Φ22 x 2	364

Accessories (Optional parts)

B131210G EXCLUSIVE CABLE GLAND for BCSB

NEW

■ Exclusive cable gland for Φ22 knock-outs on BCSB series switch box.

■ The PG13.5 thread (Φ20.5) is a little smaller than Φ22 hole but is compatible for the Φ22 knock-out hole.

■ Install B131210G into the very center of the Φ22 knock-out hole.

■ Cap and connector are made from PA66 material, light gray color type. Sealing insert and O-ring are made from NBR material, black color type.

Technical Data
Protection class : IP65 Operating temperature : -20°C ~ +75°C

Product no. / Dimensions

Product no.	Cable range		Suitable models	Weight (g)
	Min	Max		
B131210G	7	11	BCSB series	12.7

■ DXF/DWG/PDF drawings available on our website.

TAKACHI

TMB SERIES TERMINAL JUNCTION BOX

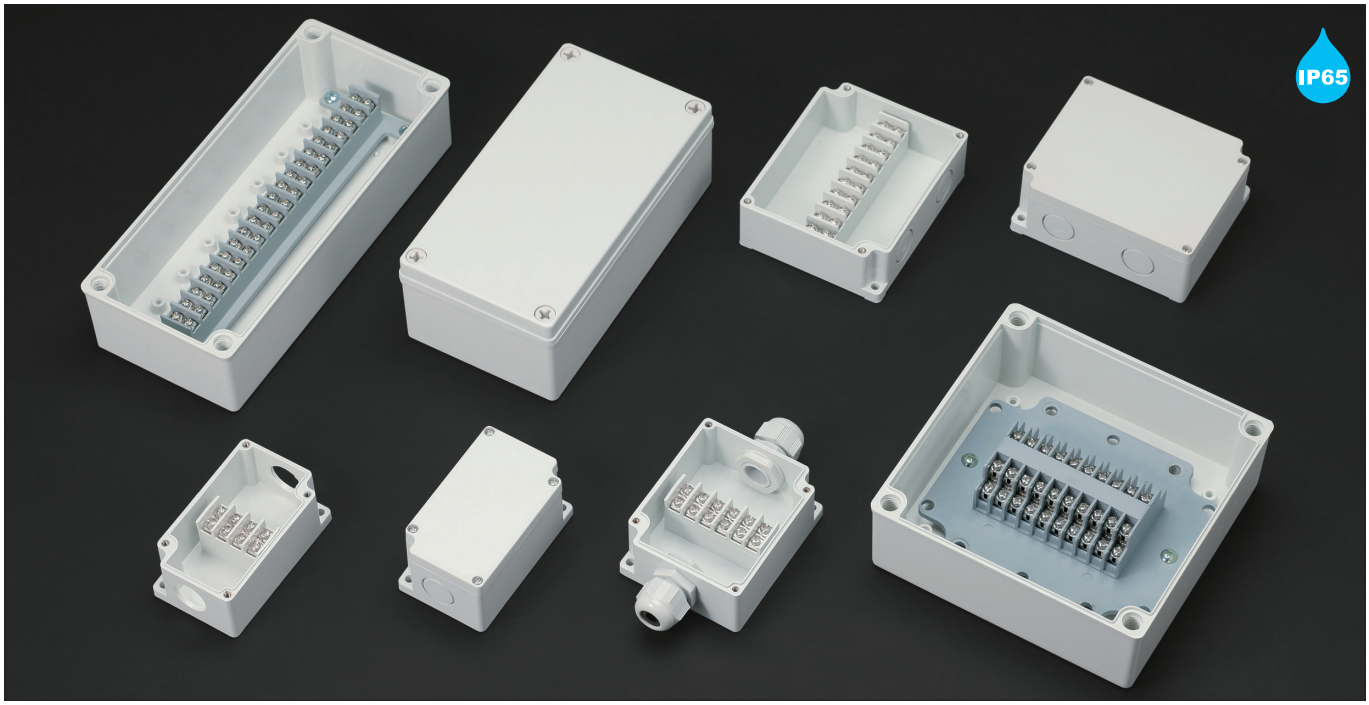

- Terminal junction box with built-in terminal block.
- IP65 protection class.
- Made of flame-resistant ABS plastic (UL94V-0).
- TMB-4P • 6P • 10P is molded with Φ21.0mm metric knock-outs for M20 cable glands.
- To knock out the hole covers, rest a flathead screwdriver at the "A" points, and punch out the knock-outs by hammering on the rear end of the screwdriver handle with a hammer.

Technical Data

Protection class: IP65
Operating temperature: -10°C ~ +60°C
Recommended torque:
TMB-4P • 6P • 10P : 0.6N • m
TMB-15PS • 20P • 20PL : 1N • m

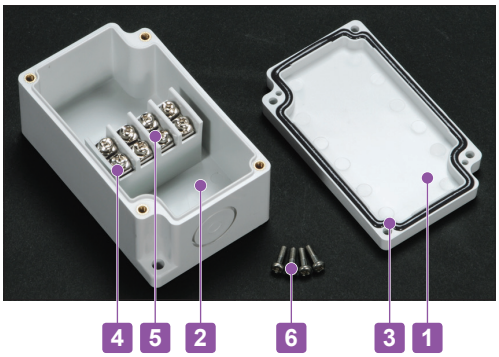

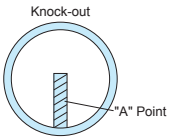

Terminal Block Specification

Rated voltage	400V
Rated current	17.5A
Applicable wire	1.5mm^2
Standard tightening torque	0.8N • m

Applicable crimp terminal R1.25-3.5

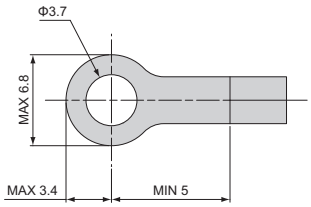

Components

No.	Part name	Pcs	Material	Color / Finish
1	Top cover	1	ABS UL94V-0	Light gray
2	Body	1	ABS UL94V-0	Light gray
3	Gasket	1	Polyurethane	Black
4	Conductive plate	4 ~ 20	Brass	Nickel plated
5	Terminal screw	8 ~ 40	Steel (M3.5)	Nickel plated
-	Terminal mount screw (15PS, 20P, 20PL models only)	2 ~ 4	Steel	Trivalent chromate
6	Cover screw	4	Stainless steel • Nylon	Unfinished

※Cover screw material : Stainless steel - 4P, 6P, and 10P models • Nylon - 15PS, 20P, and 20PL models.

Accessories (Optional parts)

Shorting bar SBR series
See page SBR-1

Cable gland
See cable gland pages

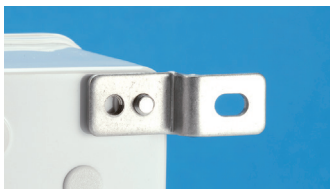

Mounting bracket CK-34Z
See page BCAS • BCAL-ACC-2

Product no. / Dimensions

Product no.	L	W	H	Number of poles	Weight (g)
TMB- 4P	91	55	43	4P	102
TMB- 6P	91	75	43	6P	134
TMB-10P	91	110	43	10P	190
TMB-15PS	185	100	70	15P	412
TMB-20P	160	160	70	10P x 2	560
TMB-20PL	230	100	70	20P	484

TMB dimensions

■ Drawings below are reference examples only.
DXF/DWG/PDF drawings available on our website.

TMB-4P

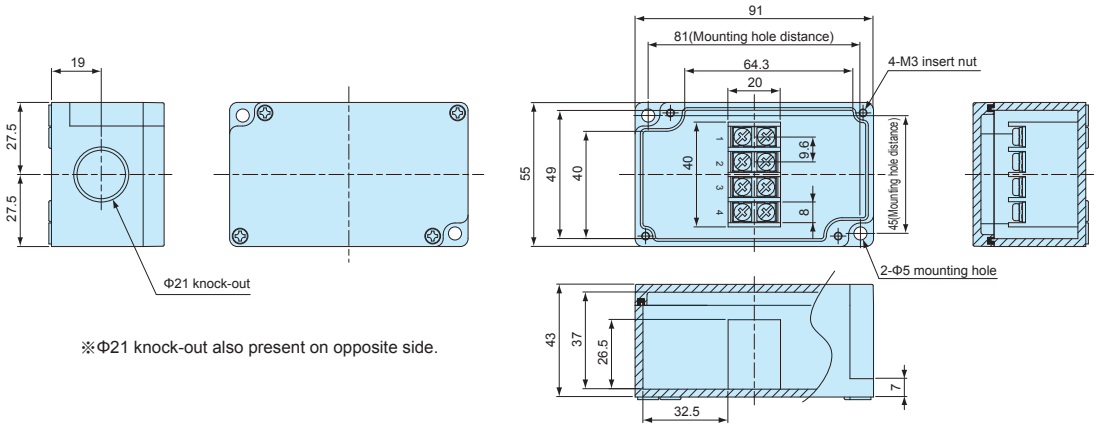

※Φ21 knock-out also present on opposite side.

TMB-6P

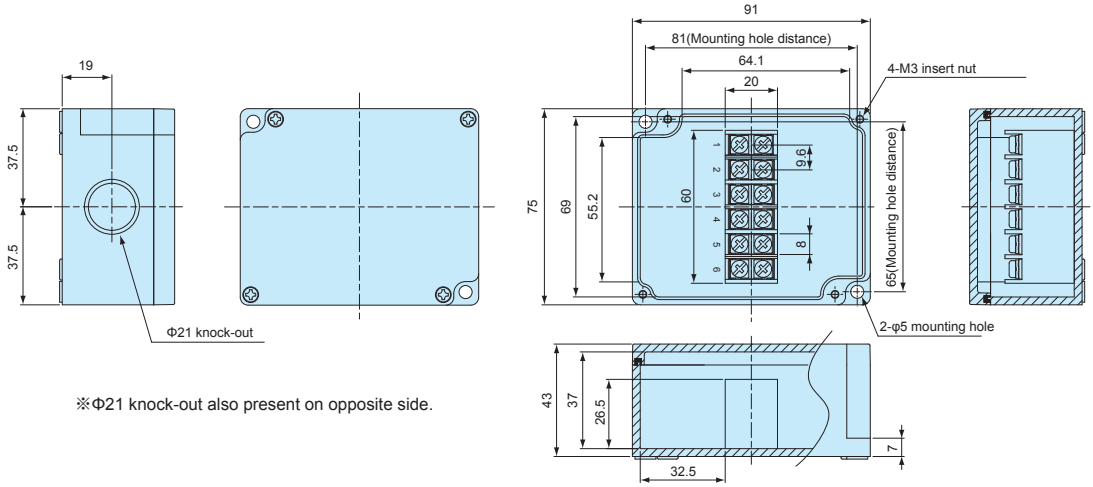

※Φ21 knock-out also present on opposite side.

TMB-10P

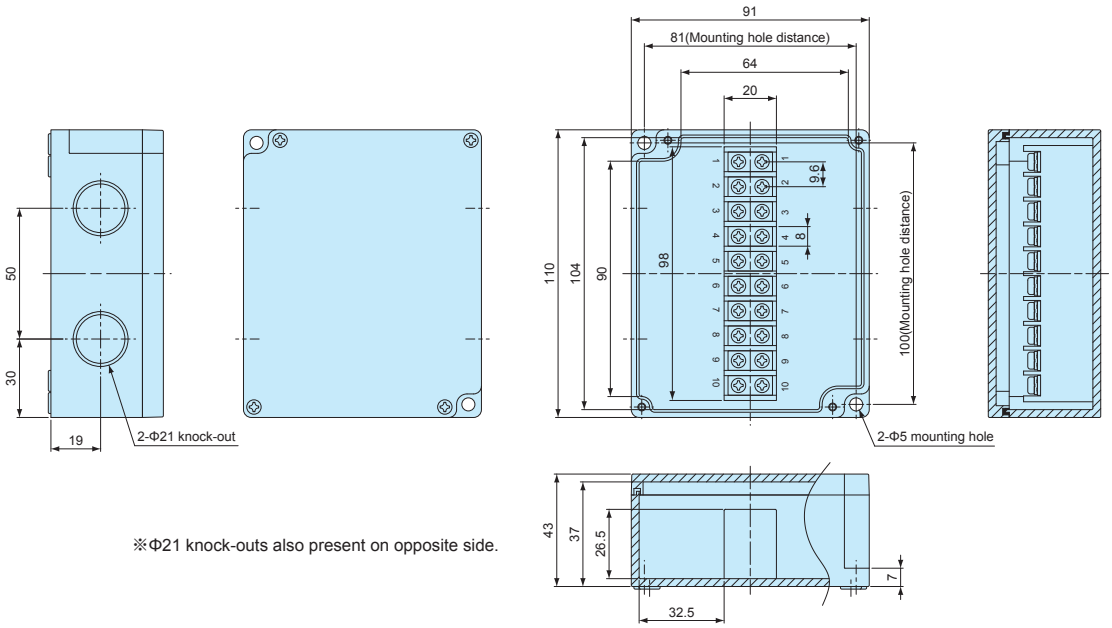

※Φ21 knock-outs also present on opposite side.

TMB-15PS

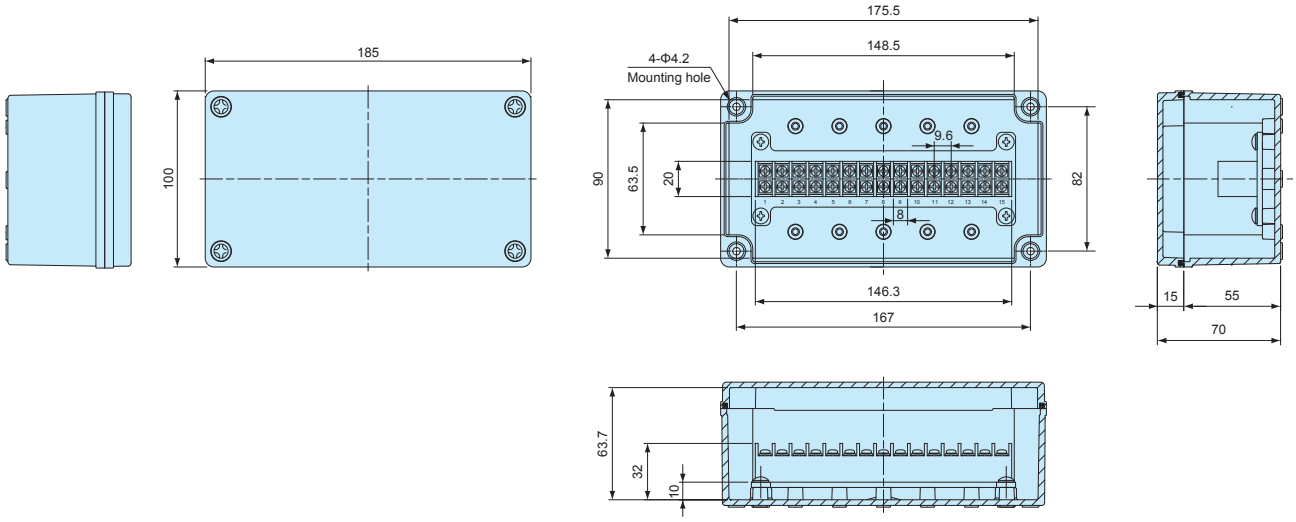

TMB-20P

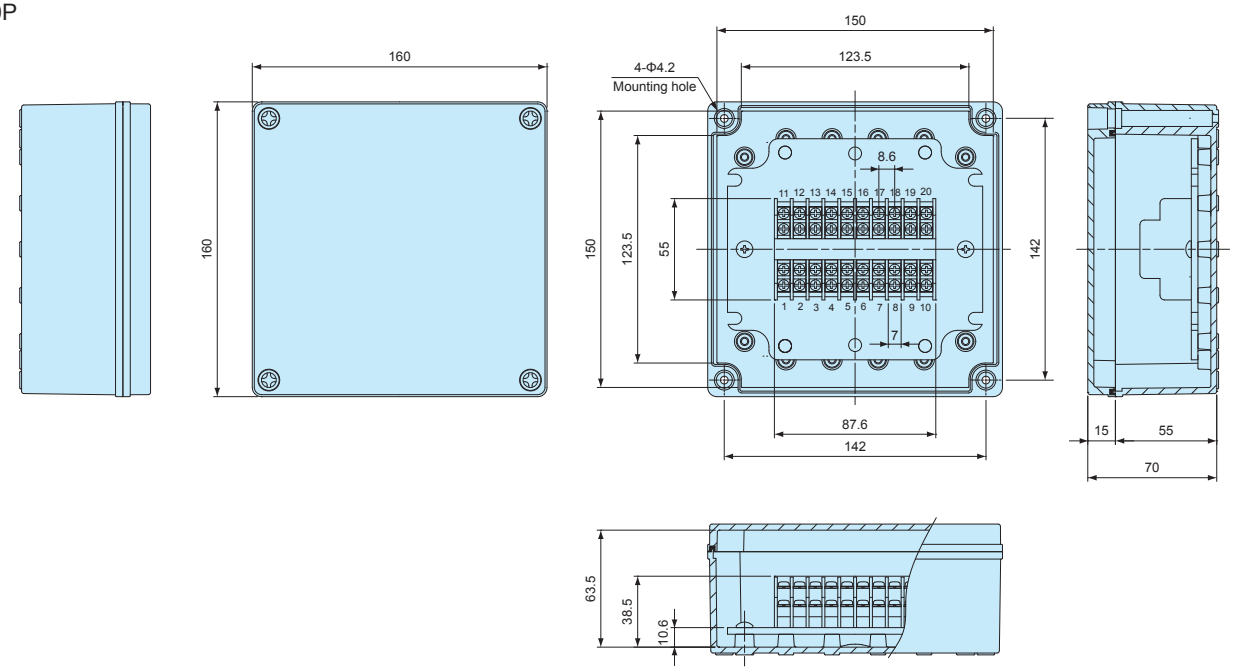

TMB-20PL

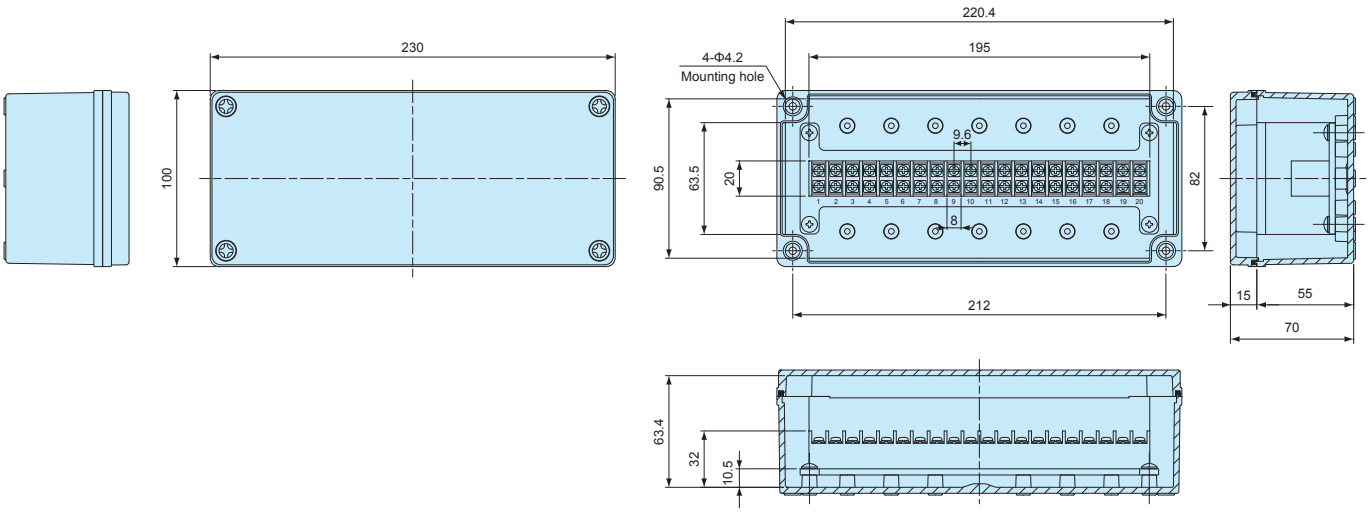

TMC series TERMINAL JUNCTION BOX

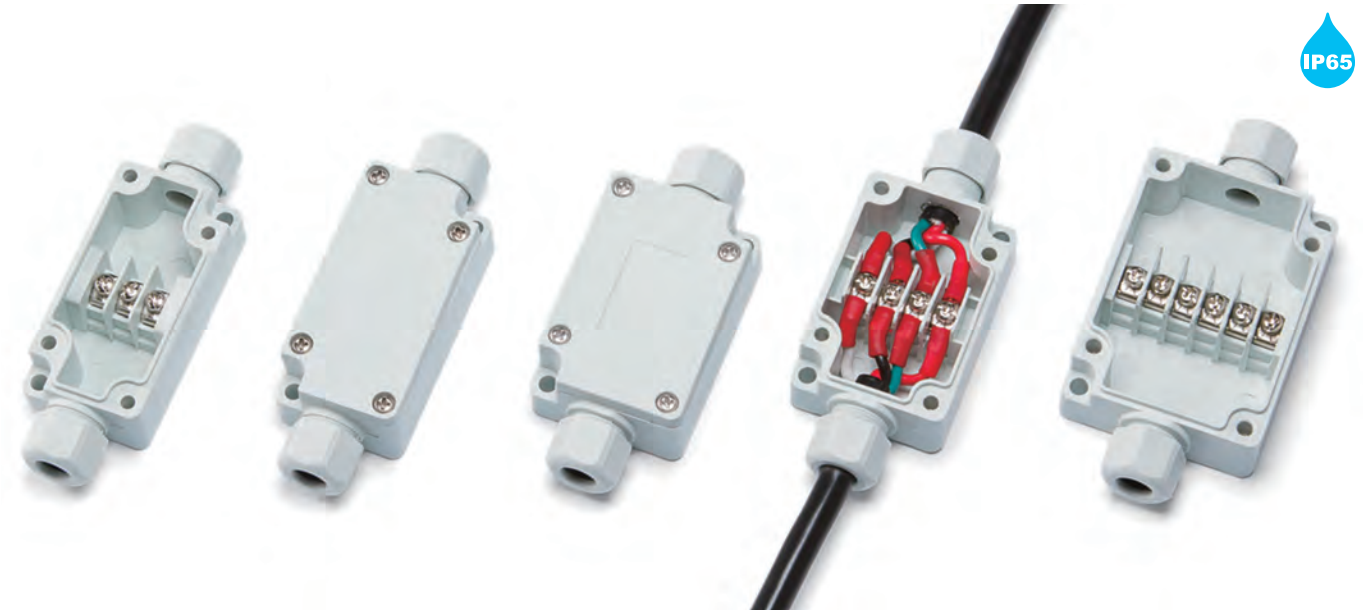

- Integrated junction box consisting of cable glands and a terminal block.
- Suitable for industrial facilities, power cable joints, relay between motors and/or sensors.
- IP65 protection class with high oil resistant PBT material.
- 3, 4, and 6 pole types are available.
- Φ5.0 and Φ7.4 rubber cable bushes (2 pcs each) are included.

Technical Data

Protection class: IP65
Operating temperature: -20°C ~ +75°C
Recommended torque : 0.5N • m

Applicable crimp terminal
R1.25-3

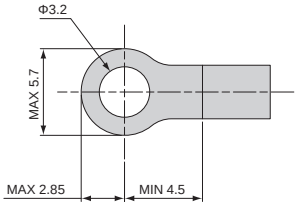

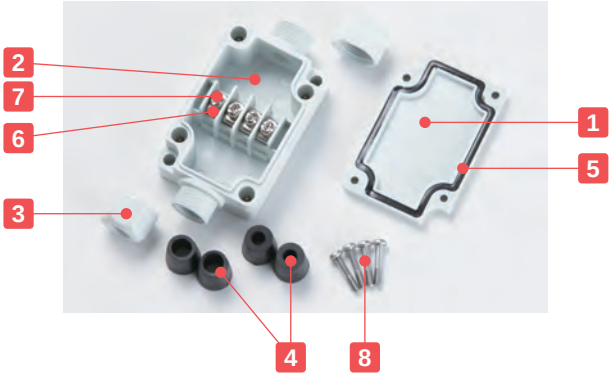

Terminal Block Specification

Rated voltage	250V
Rated current	15A
Applicable wire	1.25mm^2
Standard tightening torque	0.5N • m

Components

No.	Part name	Pcs	Material	Color / Finish
1	Cover	1	PBT UL94V-0	Light gray
2	Base	1	PBT UL94V-0	Light gray
3	Cable cap	2	PBT UL94V-0	Light gray
4	Rubber bush	2 pairs	EPDM	Black
5	Gasket	1	Polyurethane	Black
6	Conductive plate	3~6	Brass	Nickel plated
7	Terminal screw	3~6	Steel M3	Nickel plated
8	Cover screw	4	Stainless steel M3	Unfinished

Accessories (Optional parts)

Shorting Bar SBR series
See website

Rubber Bush RB series
See website

Product no. / Dimensions

Product no. ● Light gray	L	W	H	Number of poles	Weight (g)
TMC-3PG	65	33	24	3P	52
TMC-4PG	60	40	24	4P	58
TMC-6PG	70	50	24	6P	73

TMC dimensions

■ DXF/DWG/PDF drawings available on our website.

TMC-3PG

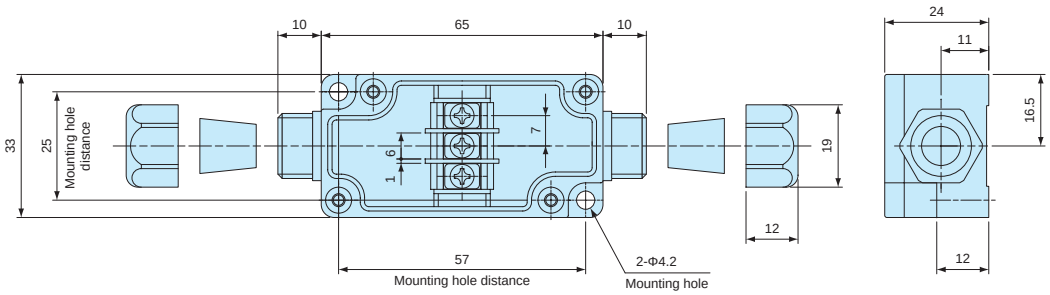

Inner diameter of rubber bush	Cable range
Φ5.0	Φ4 ~ Φ5
Φ7.4	Φ6 ~ Φ7

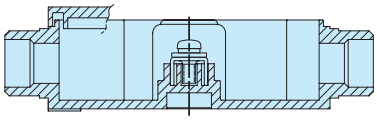

TMC-4PG

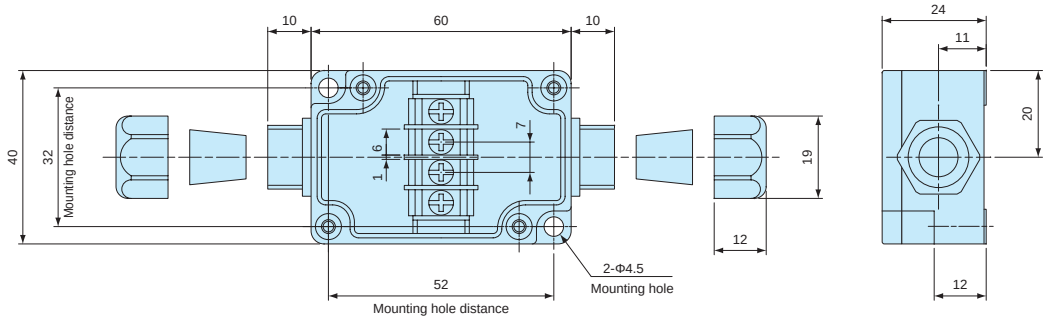

Inner diameter of rubber bush	Cable range
Φ5.0	Φ4 ~ Φ5
Φ7.4	Φ6 ~ Φ7

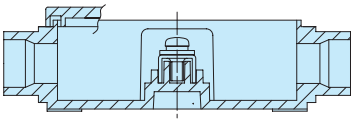

TMC-6PG

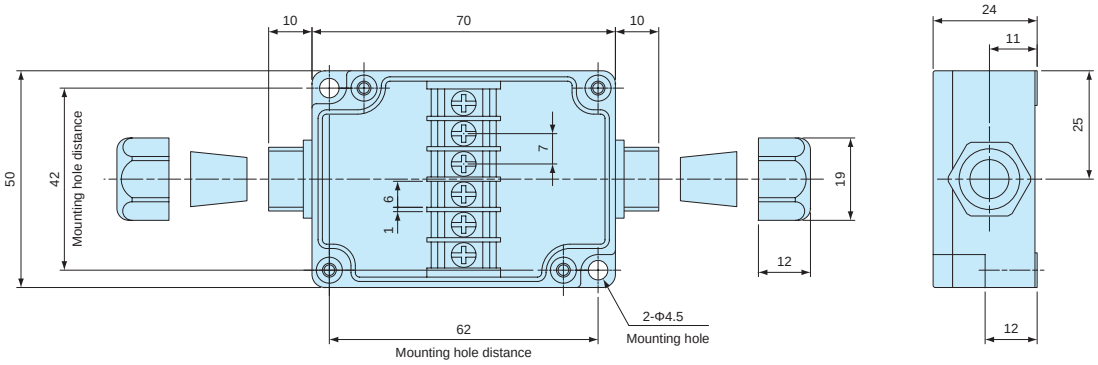

Inner diameter of rubber bush	Cable range
Φ5.0	Φ4 ~ Φ5
Φ7.4	Φ6 ~ Φ7

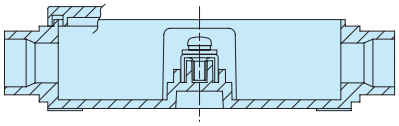

SBR SERIES SHORTING BAR

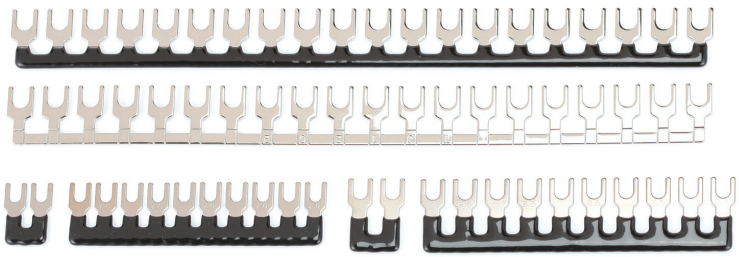

- Shorting bar for common-wiring.
- SBR70-10P, SBR85-10P, SBR95-20P, and SBR95-20N can be cut accordingly into required poles.
- PVC coated. SBR95-20 available in both PVC coated (SBR95-20P) and non PVC coated (SBR95-20N) models.
- See chart below for suitable box.

SBR70-2P

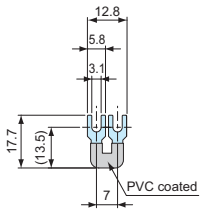

SBR70-10P

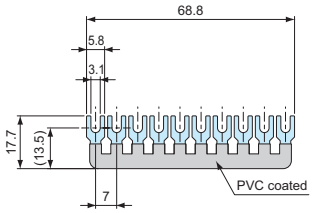

SBR85-2P

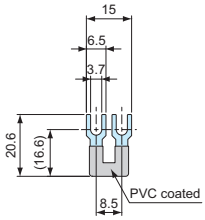

SBR85-10P

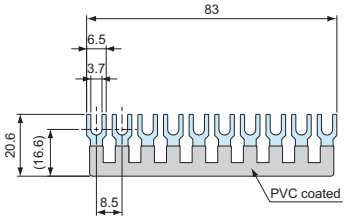

SBR95-20P

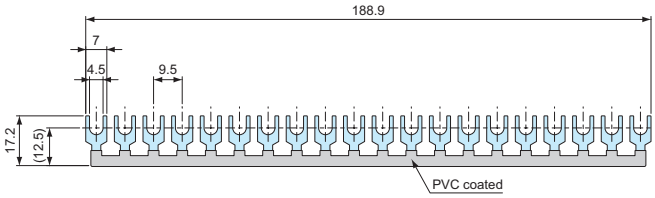

SBR95-20N

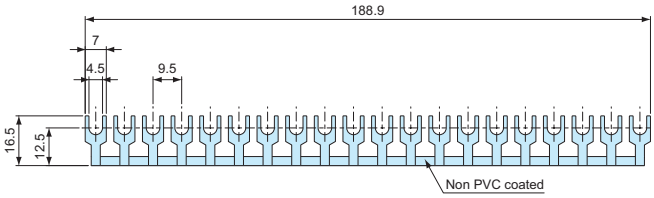

Suitable Box Chart

Product no.	Number of poles	Pole distance	Suitable box
SBR70 - 2P	2P	7.0mm	TMC series
SBR70 -10P	10P	7.0mm	TMC series
SBR85 - 2P	2P	8.6mm	TMB-20P, TMA-20P-AS, TMA30P-AS
SBR85 -10P	10P	8.6mm	TMB-20P, TMA-20P-AS, TMA30P-AS
SBR95 -20P	20P	9.6mm	TMA • TMB series (Not applicable for TMB-20P, TMA20P-AS, and TMA30P-AS models)
SBR95 -20N	20P	9.6mm	TMA • TMB series (Not applicable for TMB-20P, TMA20P-AS, and TMA30P-AS models)

Product no. / Feature

■ Pack quantity differs by models.

Product no.	Number of poles	Material	Finish	PVC coating	Pack of
SBR70 - 2P	2P	Brass	Nickel plated	Yes	10
SBR70 -10P	10P	Brass	Nickel plated	Yes	1
SBR85 - 2P	2P	Brass	Nickel plated	Yes	10
SBR85 -10P	10P	Brass	Nickel plated	Yes	1
SBR95 -20P	20P	Brass	Nickel plated	Yes	1
SBR95 -20N	20P	Brass	Nickel plated	No	1

RB-9 RUBBER BUSH

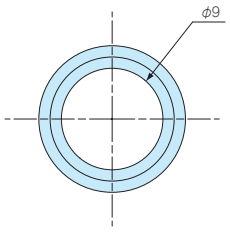

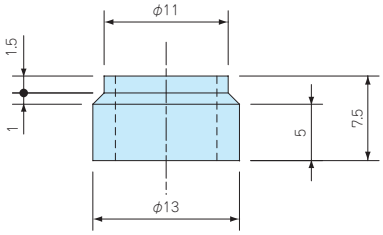

- Rubber bush for TMC series terminal junction box.
- Applicable for Φ8 ~ Φ9mm diameter cable.

Product no. / Feature

Product no.	Material	Color	Cable range	Pack of
RB-9	NBR	Black	Φ8 ~ Φ9mm	2

SZ SERIES WATERPROOF WASHER

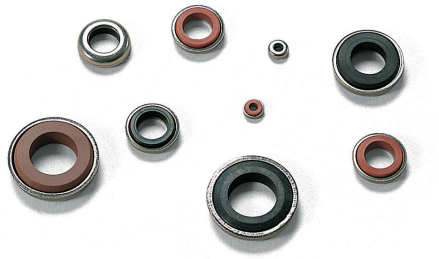

- Waterproof washer for screwing onto waterproof boxes.
- NBR sealing material has superior oil resistance (N models only) .
- Silicone sealing material has wider operating temperature with superior temperature and water resistance (S models only).

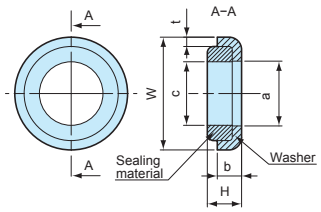

- Shape of the sealing material vary by product.

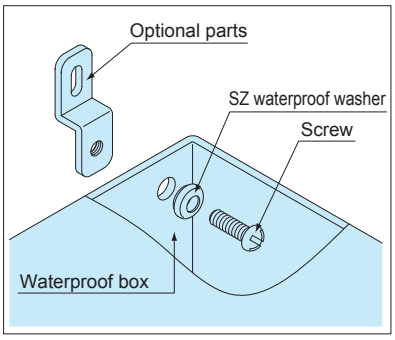

Technical Data

Water pressure resistance:
M3 ~ M10 : 200kg/cm² 5min
M12 ~ M16 : 100kg/cm² 5min

Product no. / Dimensions

Product no.	W	H	a	b	c	t	Washer material	Sealing material	Color	Screw size	Pack of
SZ- 3N	7	2.7	3.2	2.2	3.1	0.5	SUS304	NBR	Black	M 3	1
SZ- 3S	7	2.7	3.2	2.2	3.1	0.5	SUS304	Silicone	Brown	M 3	1
SZ- 4N	8	2.8	4.2	2.1	4.1	0.5	SUS304	NBR	Black	M 4	1
SZ- 4S	8	2.8	4.2	2.1	4.1	0.5	SUS304	Silicone	Brown	M 4	1
SZ- 5N	9.5	3.6	5.2	2.7	5.1	0.8	SUS304	NBR	Black	M 5	1
SZ- 5S	9.5	3.6	5.2	2.7	5.1	0.8	SUS304	Silicone	Brown	M 5	1
SZ- 6N	11.5	4	6.2	3	6.2	1	SUS304	NBR	Black	M 6	1
SZ- 6S	11.5	4	6.2	3	6.2	1	SUS304	Silicone	Brown	M 6	1
SZ- 8N	15.2	3.8	8.2	3.2	8.2	1	SUS304	NBR	Black	M 8	1
SZ- 8S	15.2	3.8	8.2	3.2	8.2	1	SUS304	Silicone	Brown	M 8	1
SZ-10N	18	5.3	10.2	4	10.2	1.5	SUS304	NBR	Black	M10	1
SZ-10S	18	5.3	10.2	4	10.2	1.5	SUS304	Silicone	Brown	M10	1
SZ-12N	24	6.1	14.2	4.8	12.2	1.5	SUS304	NBR	Black	M12	1
SZ-12S	24	6.1	14.2	4.8	12.2	1.5	SUS304	Silicone	Brown	M12	1
SZ-16N	30	6.8	18.4	5.3	16	1.9	SUS304	NBR	Black	M16	1
SZ-16S	30	6.8	18.4	5.3	16	1.9	SUS304	Silicone	Brown	M16	1

TAKACHI

RMW SERIES WEATHERPROOF CABLE GLAND

NEW

IP67

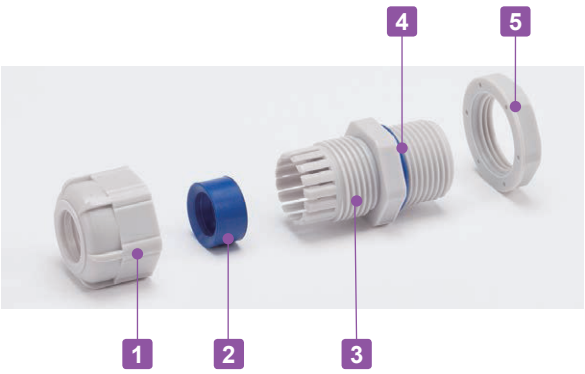

- Weatherproof cable gland equipped with high ultraviolet and degradation resistant silicone sealing insert and O-ring.
- Recommended to use outdoors where waterproofing is critical.

Components

■ PA = Polyamide

No.	Part name	Material
1	Cap	PA66 UL94V-2
2	Sealing insert	Silicone
3	Connector	PA66 UL94V-2
4	O-ring	Silicone
5	Nut	PA66 UL94V-2

RMW dimensions

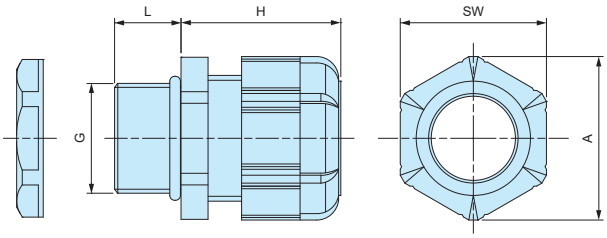

Technical Data

Protection class: IP67
Operating temperature: -20°C ~ +80°C

- DXF/DWG/PDF drawings available on our website.
- Lock nut is not included for RMW10S-6.
  Please drill a proper thread hole into the enclosure for installation.

Product no. / Dimensions

Product no.		G		Cable range		L	H Max	SW	A	Pack of
● Black	● Light gray	Thread size	Mounting hole	Min	Max					
RMW8L-2.5B	RMW8L-2.5S	M8×1.25	Φ8.2	1	2.5	13	19.5	11.8	13.5	1
RMW8L-4B	RMW8L-4S	M8×1.25	Φ8.2	2.5	4	13	19.5	11.8	13.5	1
RMW10S-6B	RMW10S-6S	M10×1.5	—	3	6	8	20.5	13	14.4	1
RMW10L-6B	RMW10L-6S	M10×1.5	Φ10.2	3	6	13	20.5	13	14.4	1
RMW12S-7B	RMW12S-7S	M12×1.5	Φ12.2	3.5	7	9	20.5	16	17.6	1
RMW12L-7B	RMW12L-7S	M12×1.5	Φ12.2	3.5	7	14.5	20.5	16	17.7	1
RMW16S-8B	RMW16S-8S	M16×1.5	Φ16.2	4	8	9	23.5	19	21	1
RMW16L-8B	RMW16L-8S	M16×1.5	Φ16.2	4	8	15	24	19	21	1
RMW20S-12B	RMW20S-12S	M20×1.5	Φ20.2	6	12	10	29	24	26.2	1
RMW20L-12B	RMW20L-12S	M20×1.5	Φ20.2	6	12	15	28.5	24	26.2	1
RMW25L-17B	RMW25L-17S	M25×1.5	Φ25.2	11	17	15	35	33	36.2	1
RMW32L-21B	RMW32L-21S	M32×1.5	Φ32.3	13	21	15	38	36	39.5	1
RMW40L-27B	RMW40L-27S	M40×1.5	Φ40.3	18	27	18	43.5	45.7	50.5	1
RMW50L-38B	RMW50L-38S	M50×1.5	Φ50.4	27	38	20	50.5	60	66.5	1
RMW8L-2.5B-P	RMW8L-2.5S-P	M8×1.25	Φ 8.2	1	2.5	13	19.5	11.8	13.5	100
RMW8L-4B-P	RMW8L-4S-P	M8×1.25	Φ 8.2	2.5	4	13	19.5	11.8	13.5	100
RMW10L-6B-P	RMW10L-6S-P	M10×1.5	Φ10.2	3	6	13	20.5	13	14.4	100
RMW12S-7B-P	RMW12S-7S-P	M12×1.5	Φ12.2	3.5	7	9	20.5	16	17.6	100
RMW12L-7B-P	RMW12L-7S-P	M12×1.5	Φ12.2	3.5	7	14.5	20.5	16	17.7	100
RMW16S-8B-P	RMW16S-8S-P	M16×1.5	Φ16.2	4	8	9	23.5	19	21	100
RMW16L-8B-P	RMW16L-8S-P	M16×1.5	Φ16.2	4	8	15	24	19	21	100
RMW20S-12B-P	RMW20S-12S-P	M20×1.5	Φ20.2	6	12	10	29	24	26.2	100
RMW20L-12B-P	RMW20L-12S-P	M20×1.5	Φ20.2	6	12	15	28.5	24	26.2	100
RMW25L-17B-P	RMW25L-17S-P	M25×1.5	Φ25.2	11	17	15	35	33	36.2	100

RMW series silicone sealing insert weatherproof test report

Object: Cut into a piece of the silicone sealing insert from RMW series and attach it onto an aluminium plate.
For comparison, NBR sealing insert from our RM and EPDM sealing insert from another manufacturer is also attached for comparison purposes.

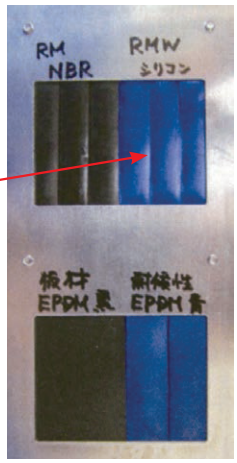

Before

After

Testing conditions

Equipment : 7.5kW Super Xenon Weather Meter SX75 (Suga Test Instruments Co., Ltd.- http://www.sugatest.co.jp/english/)
Conditions : JIS B7754 : 1991
Testing with an authorized Xenon arc lamp weathering test equipment under the conditions denoted below.
Irradiance : 180W/m^2 at 300-400nm
Black Panel Temperature : 63±3°C Humidity Range : 50±10%
Cycle Conditions : 120 minutes cycle (18 minutes irradiation + water spray - 102 minutes irradiation)
Time period : 2,000 hours (equivalent to a period of 4 years under natural conditions)
Total radiant exposure : 1296MJ/m^2

Test result (visual / touch inspection)

Silicone sealing insert material : No cracks, no gloss transition, no powder - no appearance change at all. Flexibility remains unchanged.

Before

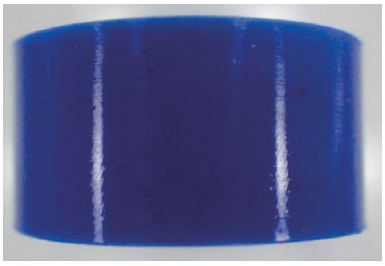

After

NBR material from our RM series : Lost glossiness on the surface and material is stiffened.

Before

After

EPDM material from weatherproof cable gland of another manufacturer : Cracked, color drastically faded and powder appeared on the surface.

Before

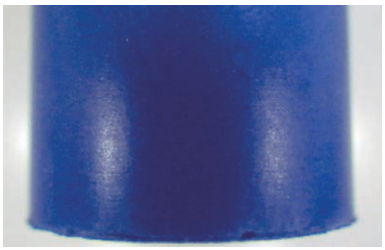

After

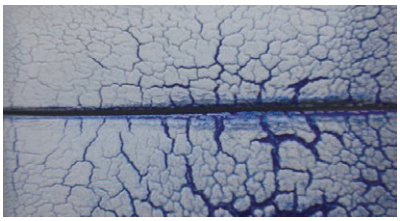

RMW series WEATHERPROOF CABLE GLAND

IP67

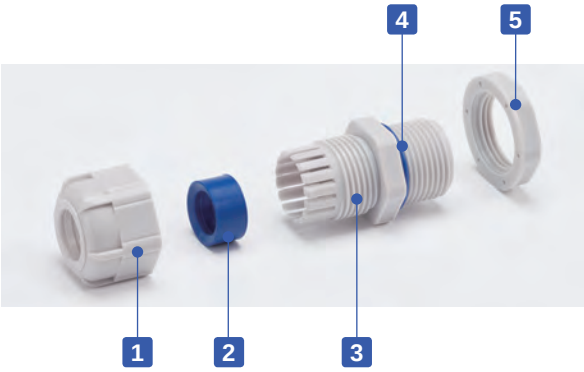

- Weatherproof cable gland equipped with high ultraviolet and degradation resistant silicone sealing insert and O-ring.
- Recommended to use outdoors where waterproofing is critical.
- IP67 protection class.

Components

■ PA = Polyamide

No.	Part name	Material
1	Cap	PA66 UL94V-2
2	Sealing insert	Silicone
3	Connector	PA66 UL94V-2
4	O-ring	Silicone
5	Lock nut	PA66 UL94V-2

RMW dimensions

■ DXF/DWG/PDF drawings available on our website.

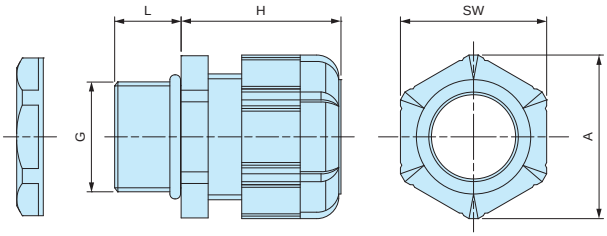

Technical Data

Protection class: IP67
Operating temperature: -20°C ~ +80°C

■ Lock nut is not included for RMW10S-6.
Please drill a proper thread hole into the enclosure for installation.

Product no. / Dimensions

Product no.		G		Cable range		L	H Max	SW	A	Pack of
● Black	● Light gray	Thread size	Mounting hole	Min	Max					
RMW8L-2.5B	RMW8L-2.5S	M8×1.25	Φ8.2	1	2.5	13	19.5	11.8	13.5	1
RMW8L-4B	RMW8L-4S	M8×1.25	Φ8.2	2.5	4	13	19.5	11.8	13.5	1
RMW10S-6B	RMW10S-6S	M10×1.5	—	3	6	8	20.5	13	14.4	1
RMW10L-6B	RMW10L-6S	M10×1.5	Φ10.2	3	6	13	20.5	13	14.4	1
RMW12S-7B	RMW12S-7S	M12×1.5	Φ12.2	3.5	7	9	20.5	16	17.6	1
RMW12L-7B	RMW12L-7S	M12×1.5	Φ12.2	3.5	7	14.5	20.5	16	17.7	1
RMW16S-8B	RMW16S-8S	M16×1.5	Φ16.2	4	8	9	23.5	19	21	1
RMW16L-8B	RMW16L-8S	M16×1.5	Φ16.2	4	8	15	24	19	21	1
RMW20S-12B	RMW20S-12S	M20×1.5	Φ20.2	6	12	10	29	24	26.2	1
RMW20L-12B	RMW20L-12S	M20×1.5	Φ20.2	6	12	15	28.5	24	26.2	1
RMW25L-17B	RMW25L-17S	M25×1.5	Φ25.2	11	17	15	35	33	36.2	1
RMW32L-21B	RMW32L-21S	M32×1.5	Φ32.3	13	21	15	38	36	39.5	1
RMW40L-27B	RMW40L-27S	M40×1.5	Φ40.3	18	27	18	43.5	45.7	50.5	1
RMW50L-38B	RMW50L-38S	M50×1.5	Φ50.4	27	38	20	50.5	60	66.5	1
RMW10L-6B-P	RMW10L-6S-P	M10×1.5	Φ10.2	3	6	13	20.5	13	14.4	100
RMW12S-7B-P	RMW12S-7S-P	M12×1.5	Φ12.2	3.5	7	9	20.5	16	17.6	100
RMW12L-7B-P	RMW12L-7S-P	M12×1.5	Φ12.2	3.5	7	14.5	20.5	16	17.7	100
RMW16S-8B-P	RMW16S-8S-P	M16×1.5	Φ16.2	4	8	9	23.5	19	21	100
RMW16L-8B-P	RMW16L-8S-P	M16×1.5	Φ16.2	4	8	15	24	19	21	100
RMW20S-12B-P	RMW20S-12S-P	M20×1.5	Φ20.2	6	12	10	29	24	26.2	100
RMW20L-12B-P	RMW20L-12S-P	M20×1.5	Φ20.2	6	12	15	28.5	24	26.2	100

RMW series silicone sealing insert weatherproof test report

Object: Cut into a piece of the silicone sealing insert from RMW series and attach it onto an aluminium plate.
For comparison, NBR sealing insert from our RM and EPDM sealing insert from another manufacturer is also attached for comparison purposes.

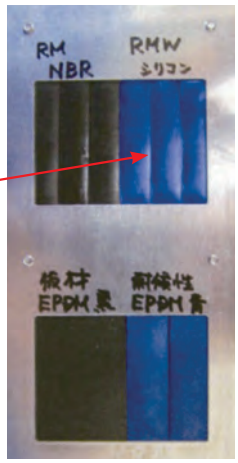

Before

After

Testing conditions

Equipment : 7.5kW Super Xenon Weather Meter SX75 (Suga Test Instruments Co., Ltd.- http://www.sugatest.co.jp/english/)
Conditions : JIS B7754 : 1991
Testing with an authorized Xenon arc lamp weathering test equipment under the conditions denoted below.
Irradiance : 180W/m^2 at 300-400nm
Black Panel Temperature : 63±3°C Humidity Range : 50±10%
Cycle Conditions : 120 minutes cycle (18 minutes irradiation + water spray - 102 minutes irradiation)
Time period : 2,000 hours (equivalent to a period of 4 years under natural conditions)
Total radiant exposure : 1296MJ/m^2

Test result (visual / touch inspection)

Silicone sealing insert material : No cracks, no gloss transition, no powder - no appearance change at all. Flexibility remains unchanged.

Before

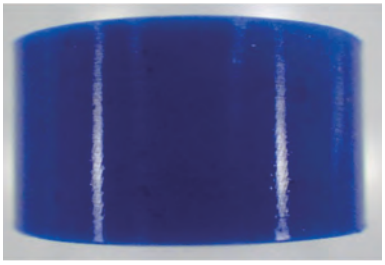

After

NBR material from our RM series : Lost glossiness on the surface and material is stiffened.

Before

After

EPDM material from weatherproof cable gland of another manufacturer : Cracked, color drastically faded and powder appeared on the surface.

Before

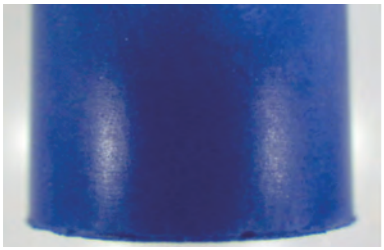

After

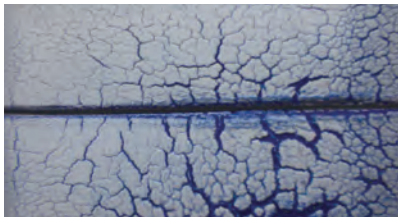

RM series POLYAMIDE CABLE GLAND

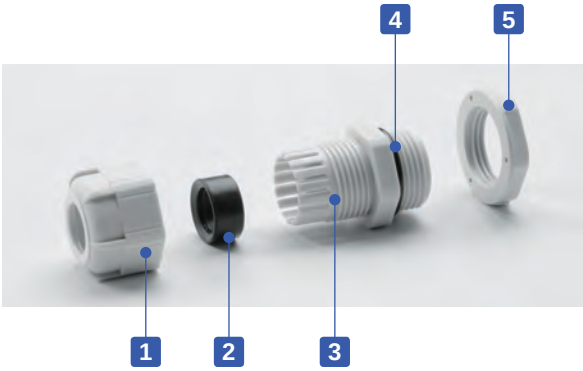

- Low cost cable glands made from polyamide material.
- Wide selection, for M8 ~ M63, suitable for Φ1mm ~ Φ44 mm cable.
- High oil resistant NBR rubber sealing and O-ring.
- IP67 protection class.

Components

■ PA = Polyamide

No.	Part name	Material
1	Cap	PA66 UL94V-2
2	Sealing insert	NBR
3	Connector	PA66 UL94V-2
4	O-ring	NBR
5	Lock nut	PA66 UL94V-2

RM dimensions

■ DXF/DWG/PDF drawings available on our website.

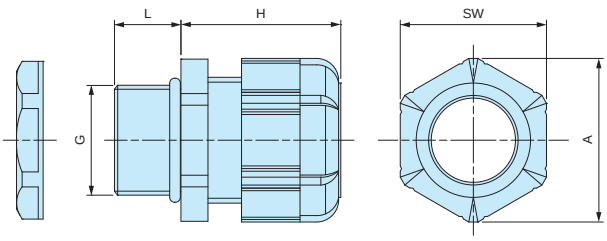

Technical Data

Protection class: IP67
Operating temperature: -20°C ~ +80°C

■ Lock nut is not included for RM8S-2.5, 8S-4, and 10S-6 models.
Please drill a proper thread hole into the enclosure for installation.

Product no. / Dimensions

Product no.		G		Cable range		L	H Max	SW	A	Pack of
● Black	● Light gray	Thread size	Mounting hole	Min	Max					
RM8S-2.5B	RM8S-2.5S	M8×1.25	—	1	2.5	7.5	19.5	11.8	13.5	1
RM8L-2.5B	RM8L-2.5S	M8×1.25	Φ8.2	1	2.5	13	19.5	11.8	13.5	1
RM8S-4B	RM8S-4S	M8×1.25	—	2.5	4	7.5	19.5	11.8	13.5	1
RM8L-4B	RM8L-4S	M8×1.25	Φ8.2	2.5	4	13	19.5	11.8	13.5	1
RM10S-6B	RM10S-6S	M10×1.5	—	3	6	8	20.5	13	14.4	1
RM10L-6B	RM10L-6S	M10×1.5	Φ10.2	3	6	13	20.5	13	14.4	1
RM12S-7B	RM12S-7S	M12×1.5	Φ12.2	3.5	7	9	20.5	16	17.6	1
RM12L-7B	RM12L-7S	M12×1.5	Φ12.2	3.5	7	14.5	20.5	16	17.7	1
RM16S-8B	RM16S-8S	M16×1.5	Φ16.2	4	8	9	23.5	19	21	1
RM16L-8B	RM16L-8S	M16×1.5	Φ16.2	4	8	15	24	19	21	1
RM20S-12B	RM20S-12S	M20×1.5	Φ20.2	6	12	10	29	24	26.2	1
RM20L-12B	RM20L-12S	M20×1.5	Φ20.2	6	12	15	28.5	24	26.2	1
RM25L-17B	RM25L-17S	M25×1.5	Φ25.2	11	17	15	35	33	36.2	1
RM32L-21B	RM32L-21S	M32×1.5	Φ32.3	13	21	15	38	36	39.5	1
RM40L-27B	RM40L-27S	M40×1.5	Φ40.3	18	27	18	43.5	45.7	50.5	1
RM50L-38B	RM50L-38S	M50×1.5	Φ50.4	27	38	20	50.5	60	66.5	1
RM63L-44B	RM63L-44S	M63×1.5	Φ63.4	37	44	20	53	68	75.5	1
RM10L-6B-P	RM10L-6S-P	M10×1.5	Φ10.2	3	6	13	20.5	13	14.4	100
RM12S-7B-P	RM12S-7S-P	M12×1.5	Φ12.2	3.5	7	9	20.5	16	17.6	100
RM12L-7B-P	RM12L-7S-P	M12×1.5	Φ12.2	3.5	7	14.5	20.5	16	17.7	100
RM16S-8B-P	RM16S-8S-P	M16×1.5	Φ16.2	4	8	9	23.5	19	21	100
RM16L-8B-P	RM16L-8S-P	M16×1.5	Φ16.2	4	8	15	24	19	21	100
RM20S-12B-P	RM20S-12S-P	M20×1.5	Φ20.2	6	12	10	29	24	26.2	100
RM20L-12B-P	RM20L-12S-P	M20×1.5	Φ20.2	6	12	15	28.5	24	26.2	100
RM25L-17B-P	RM25L-17S-P	M25×1.5	Φ25.2	11	17	15	35	33	36.2	100

RSP series STRAIN RELIEF CABLE GLAND

■ Strain relief cap protects cables by preventing it from bending beyond its limit and breaking.

Technical Data
Protection class : IP67 Operating temperature : -20°C ~ +80°C

RSP dimensions

■ DXF/DWG/PDF drawings available on our website.

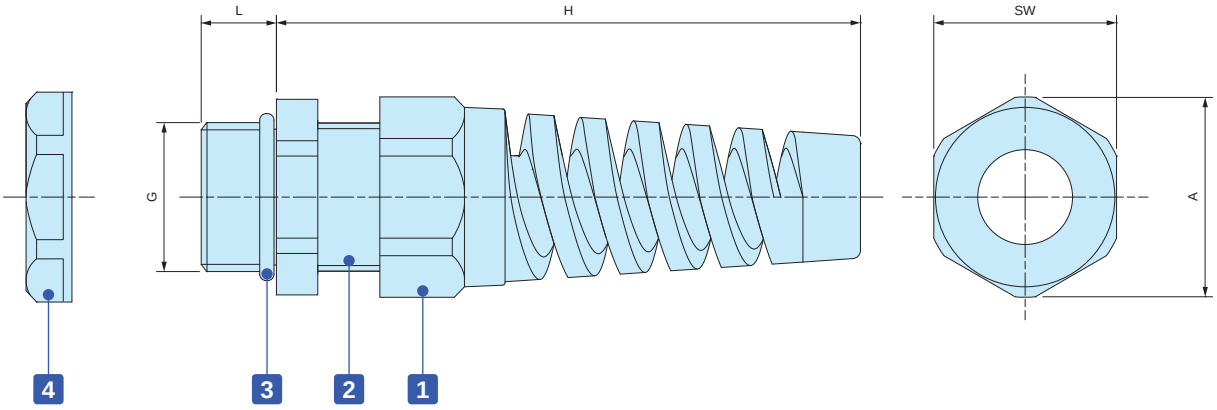

Components

No.	Part name	Material
1	Stain relief cap	PA66 UL94V-2
-	Sealing insert	NBR
2	Connector	PA66 UL94V-2
3	O-ring	NBR
4	Lock nut	PA66 UL94V-2

Product no. / Dimensions

Product no.		G		Cable range		L	H Max	SW	A	Pack of
● Black	● Light gray	Thread size	Mounting hole	Min	Max					
RSP12-6B	RSP12-6S	M12×1.5	Φ12.2	3.5	6	9	62	16	17	1
RSP16-8B	RSP16-8S	M16×1.5	Φ16.2	4	8	9	69	19.5	21	1
RSP20-11B	RSP20-11S	M20×1.5	Φ20.2	6	11	10	82	24	26	1
RSP25-16B	RSP25-16S	M25×1.5	Φ25.2	11	16	12	102	33	36	1

SP SERIES SEALING PLUG

SP dimensions

- Sealing plug for cable glands when not in use.
- Maintain a waterproof seal when plugged into the sealing insert on cable glands.

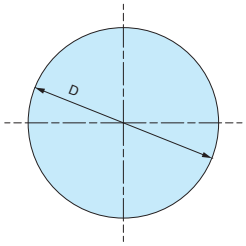

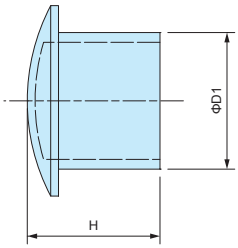

- Material : Nylon

Product no. / Dimensions

Product no.	D	D1	H	Suitable cable glands	Pack of
SP-12	10.2	6	15.5	RMW12, RM12, RMW16, RM16, RPG7, RPG9	10
SP-16	15.6	9.5	15.5	RMW20, RM20, RPG11, RPG13.5	10
SP-20	19.6	13.5	16.5	RPG16	10
SP-25	24.4	17.5	17	RMW25, RM25, RMW32, RM32, RPG21	5
SP-40	32.5	24.5	17.5	RMW40, RM40, RPG29	5
SP-50	47.2	38.9	17.6	RMW50, RM50	5

AG series HIGH WATER PROTECTION CABLE GLAND

- High water protection IP68 (1bar / 30min) polyamide cable gland.
- Wide selection, for M8 ~ M50, suitable for Φ2.5mm ~ Φ42 mm cable.
- Super tough and superior heat resistant PA6GF (glass fiber filled PA6) material on cap and connector.
- Safer halogen free, eco-friendly product.

Technical Data
Protection class: IP68 1bar / 30min Operating temperature: -20°C ~ +100°C Compliant with EN50262 Ver. A

AG series

Thicker sealing insert evenly hold a cable by having a larger holding area. Remains durable even after repeated tightening / loosening.

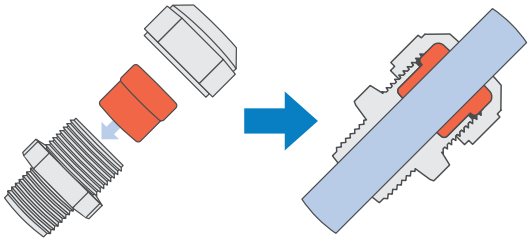

Lamellar insert type

If over-tightened, it can cause the rubber bush or cable to deform, which can allow water to seep in.

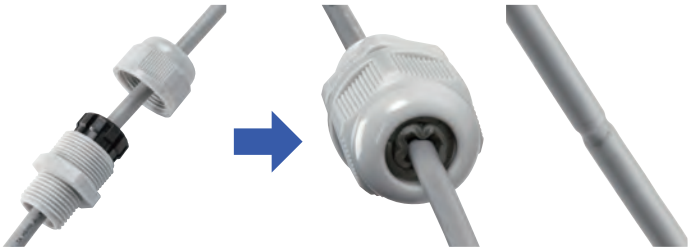

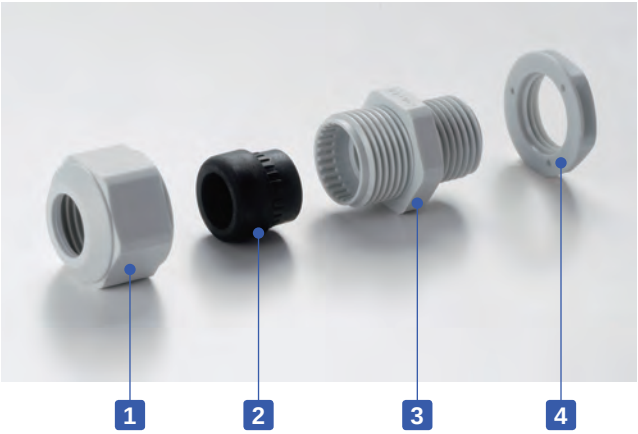

Components

■ PA6GF = Polyamide6 Glass Fiber Filled

No.	Part name	Material
1	Cap	PA6GF
2	Sealing insert	TPE
3	Connector	PA6GF
4	Lock nut	PA6

■ Lock nut is not included for M8 and M10 sizes.
Please drill a proper thread hole into the enclosure for installation.

■ Proper tightening torque varies by each cable diameter. Tighten the cap until top of the sealing insert forms a small bead between the cap and the cable.

- No optional sealing washer is required when installing on an even surface because of the built-in waterproof rib.

- An optional sealing washer is required when installing on an uneven surface. (See website for more information on the optional sealing washer)

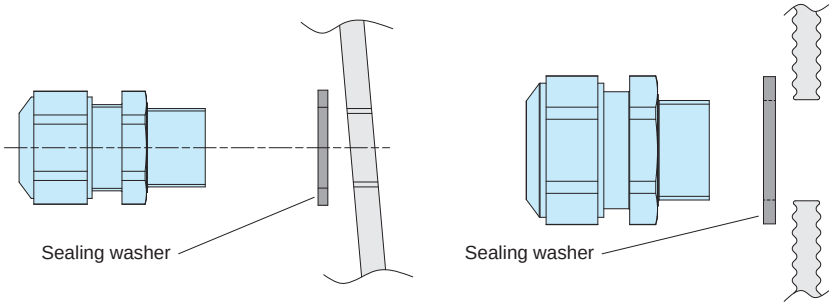

AG dimensions

- DXF/DWG/PDF drawings available on our website.

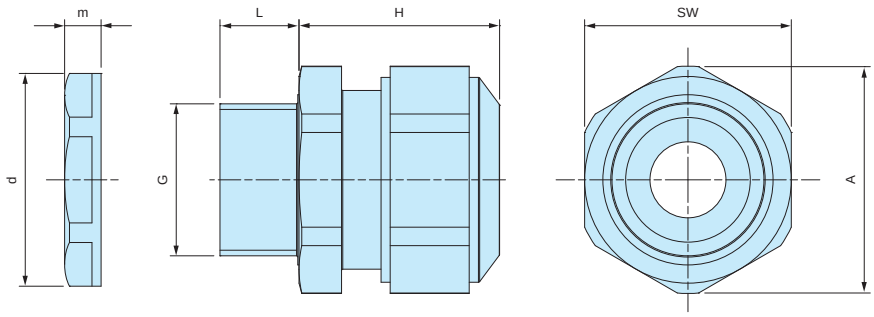

- Lock nut is not included for M8 and M10 sizes.
  Please drill a proper thread hole into the enclosure for installation.

Product no. / Dimensions

Product no.		G		Cable range		L	H Max	SW	A	d	m	Pack of
● Black	● Light gray	Thread size	Mounting hole	Min	Max							
AG8-3.5B	AG8-3.5S	M8×1.0	—	2.5	3.5	10	17	12	13.2	—	—	1
AG8-5B	AG8-5S	M8×1.0	—	3.5	4.7	10	17	12	13.2	—	—	1
AG10-6B	AG10-6S	M10×1.0	—	4	6	10	19	15	16.5	—	—	1
AG12-5B	AG12-5S	M12×1.5	Φ12.2	3.5	4.7	12	23.5	17	18.7	18.8	5	1
AG12-6.5B	AG12-6.5S	M12×1.5	Φ12.2	5	6.5	12	23	17	18.7	18.8	5	1
AG12-8B	AG12-8S	M12×1.5	Φ12.2	6.5	7.8	12	23	17	18.7	18.8	5	1
AG16-10B	AG16-10S	M16×1.5	Φ16.2	8	10	12	26	21	23.1	24.3	5	1
AG20-15B	AG20-15S	M20×1.5	Φ20.2	11	15	13	27	27	29.7	29	6	1
AG25-16B	AG25-16S	M25×1.5	Φ25.2	12.5	16	13	34	34	37.4	36	6.7	1
AG25-20B	AG25-20S	M25×1.5	Φ25.2	16	20	13	34	34	37.4	36	6.7	1
AG32-25.5B	AG32-25.5S	M32×1.5	Φ32.3	21	25.5	15	36	41	45.6	46	8	1
AG40-28.5B	AG40-28.5S	M40×1.5	Φ40.3	24	28.5	15	41	50	55.4	53.5	9	1
AG40-33B	AG40-33S	M40×1.5	Φ40.3	28.5	33	15	41	50	55.4	53.5	9	1
AG50-37B	AG50-37S	M50×1.5	Φ50.4	33	37	16	45	60	65.5	66	9.6	1
AG50-42B	AG50-42S	M50×1.5	Φ50.4	37	42	16	45	60	65.5	66	9.6	1

AGP SERIES SEALING WASHER for AG • AGSP

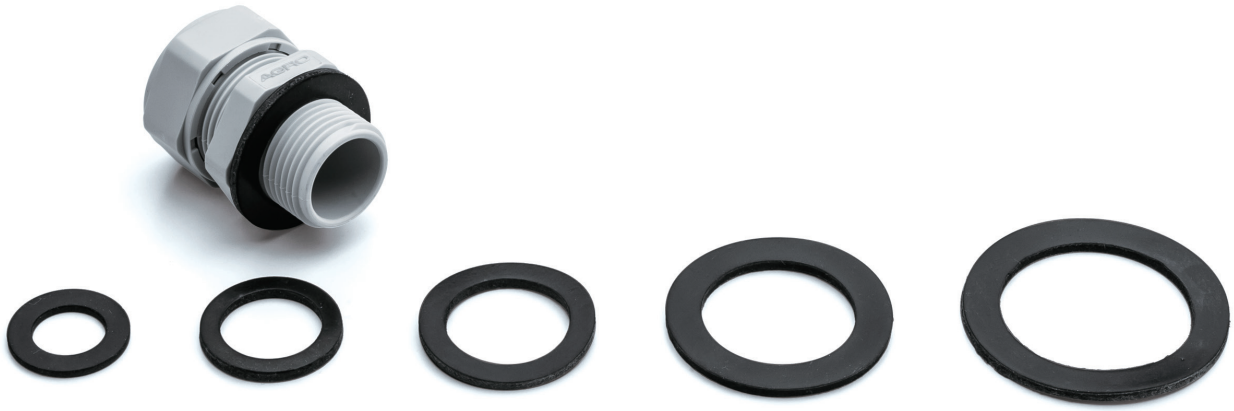

- Sealing washer for AG series.
- Made from oil resistant NBR material.
- Use in the case of installation on a rough or uneven surfaces.
- Selectable in 7 sizes (from M12 to M50)
- Sealing washer is not necessary for installation on flat surfaces.

AGP Dimensions

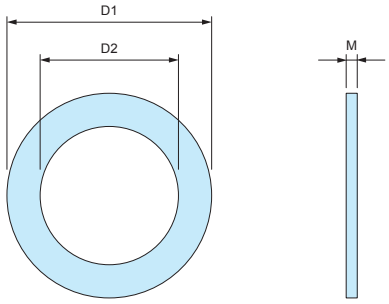

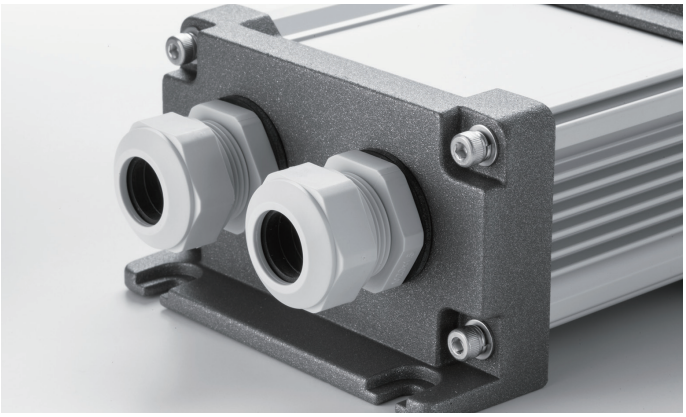

- Material : NBR

Product no. / Dimensions

Product no.	D1	D2	M	Suitable cable gland	Pack of
AGP-12	20	12	1.6	AG12	10
AGP-16	23.5	16.5	2.0	AG16	10
AGP-20	29	20	2.0	AG20	10
AGP-25	37	25	2.0	AG25	10
AGP-32	44	32	2.2	AG32	5
AGP-40	52	40	2.2	AG40	5
AGP-50	64	50	3.1	AG50	5

SZ SERIES WATERPROOF WASHER

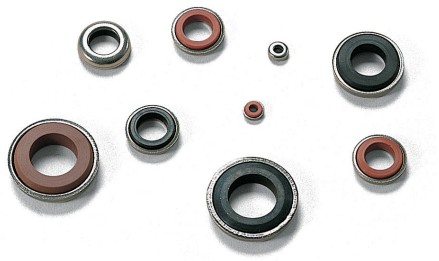

- Waterproof washer for screwing onto waterproof boxes.
- NBR sealing material has superior oil resistance (N models only) .
- Silicone sealing material has wider operating temperature with superior temperature and water resistance (S models only).

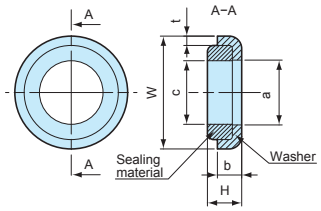

- Shape of the sealing material vary by product.

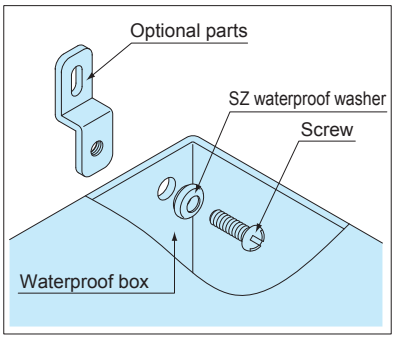

Technical Data

Water pressure resistance:
M3 ~ M10 : 200kg/cm² 5min
M12 ~ M16 : 100kg/cm² 5min

Product no. / Dimensions

Product no.	W	H	a	b	c	t	Washer material	Sealing material	Color	Screw size	Pack of
SZ- 3N	7	2.7	3.2	2.2	3.1	0.5	SUS304	NBR	Black	M 3	1
SZ- 3S	7	2.7	3.2	2.2	3.1	0.5	SUS304	Silicone	Brown	M 3	1
SZ- 4N	8	2.8	4.2	2.1	4.1	0.5	SUS304	NBR	Black	M 4	1
SZ- 4S	8	2.8	4.2	2.1	4.1	0.5	SUS304	Silicone	Brown	M 4	1
SZ- 5N	9.5	3.6	5.2	2.7	5.1	0.8	SUS304	NBR	Black	M 5	1
SZ- 5S	9.5	3.6	5.2	2.7	5.1	0.8	SUS304	Silicone	Brown	M 5	1
SZ- 6N	11.5	4	6.2	3	6.2	1	SUS304	NBR	Black	M 6	1
SZ- 6S	11.5	4	6.2	3	6.2	1	SUS304	Silicone	Brown	M 6	1
SZ- 8N	15.2	3.8	8.2	3.2	8.2	1	SUS304	NBR	Black	M 8	1
SZ- 8S	15.2	3.8	8.2	3.2	8.2	1	SUS304	Silicone	Brown	M 8	1
SZ-10N	18	5.3	10.2	4	10.2	1.5	SUS304	NBR	Black	M10	1
SZ-10S	18	5.3	10.2	4	10.2	1.5	SUS304	Silicone	Brown	M10	1
SZ-12N	24	6.1	14.2	4.8	12.2	1.5	SUS304	NBR	Black	M12	1
SZ-12S	24	6.1	14.2	4.8	12.2	1.5	SUS304	Silicone	Brown	M12	1
SZ-16N	30	6.8	18.4	5.3	16	1.9	SUS304	NBR	Black	M16	1
SZ-16S	30	6.8	18.4	5.3	16	1.9	SUS304	Silicone	Brown	M16	1

NANUK™

PROFESSIONAL PROTECTIVE CASES

THE FUTURE OF PROTECTION CASES

Tough yet stylish.

Durable and elegant.

Easily customizable.

Endless possibilities abound.

OUTDOOR

MEASUREMENT
KEEPING YOU IN CHARGE

DRONE

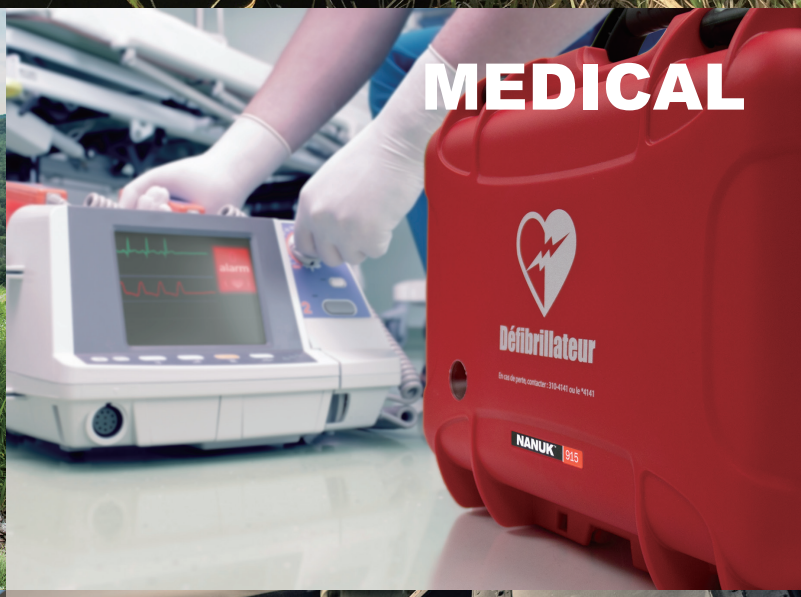
MEDICAL
Défibrillateur
NANUK 915

TRANSPORT

DEFENCE

TAKACHI

NANUK™ THE NANUK ADVANTAGE

IP65 PROTECTION CLASS

IP65 protection class for use in various environments.

Equipped with durable and weather resistant EPDM gasket.

Waterproof pressure relief valve enables pressure within the case to be equalized with the surrounding, allowing it to be opened with ease, while keeping it waterproof.

IMPACT RESISTANT-NK-7 RESIN

Impact resistant, lightweight, and armed with reinforced PP, NK-7 resin body.

Keep your items safe from impact damage.

22 DIFFERENT SIZES

A large selection of 22 different sizes, ranging from small (148.5 x 109.5 x 43mm) to large (1,196 x 440 x 168mm) types.

Smallest 3 sizes are available in 5 different colors: black, white, clear, lime and marine colors.

Other sizes are available in either black or yellow.

PROTECTIVE SPONGE FOAM

Nanuk cases are also available with a protective sponge foam.

Sponge foam are fitted to the case, and can also be purchased as separate option (NKSP series).

NKSP sponge foam comes with pre-cubed foam to allow for easy modification by removing the required squares.

(※No pre-cubed foam available for NKSP990).

Sponge customization is also available.

(See page SP-Custom-1～SP-Custom-2)

POWERCLAW LATCHING SYSTEM and SOFT GRIP HANDLE

※Latch with TSA lock on NKK series

NANUK's patented PowerClaw latching system uses compressive force to keep your case tightly clamped.

Integrated slide lock offers added security, preventing it from accidental opening during transport or when dropped.

NANUK's TPE soft grip handle makes carrying not only comfortable, but also convenient.

Handle can be folded down to be flushed with the case when not in use.

100% STAINLESS STEEL PARTS

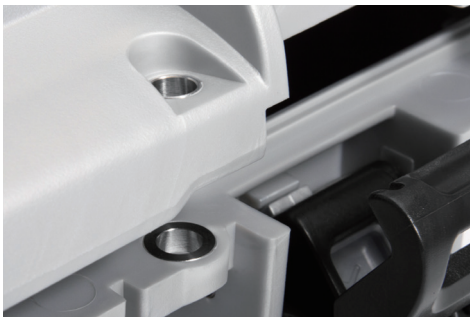

Metallic parts are made from SUS304 stainless steel.

Suitable to be used in environments with water splashes and so on.

OPTIONAL ALUMINIUM PANEL for YOUR DEVICE

Optional aluminium panel can make NANUK into your original controller, measuring device or transmitter.

See page NKAP-1 for the details of optional aluminium panel.

NKAP panel customization is available. (See NKAP-2 for more details).

●CUSTOMIZATAION on ALUMINIUM PANEL

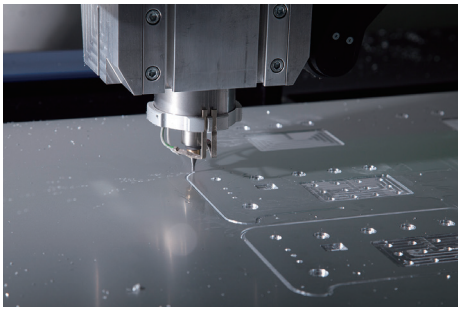

CUSTOMIZE

NK SERIES IP65 CARRYING CASE

NEW SIZE

- Durable and stylishly designed waterproof carrying case.
- Selectable in 18 different sizes, with each model available with, and without foam.
- Suitable for storing electronics and delicate devices such as measuring device, camera, broadcasting device, electric tool, medical equipment, and so on.
- Optional aluminium panel can turn the NK series into your own original controller, measuring device or transmitter.

IP65

Technical Data
Protection class : IP65 Operating temperature : -20℃～+60℃

Hinge pin shape varies based on model type

Components

No.	Part name	Material
1	Cover・Base	Reinforced PP (NK-7)
2	Latch	Nylon 66
3	Handle grip	Elastomer
4	Pressure release valve (※1)	Nylon 66・PTFE

No.	Part name	Material
5	Hinge pin	Stainless steel
6	Gasket	EPDM
7	Foam	Polyurethane / 12.7mm Pitch Pre-cut cubed foam (※2)

※1 Automatic pressure release valve enables pressure within the case to be equalized with the surrounding, allowing it to be opened with ease, while keeping it waterproof.

※2 Pitch of Pre-cut cubed foam for NK940, 945, and 950 models is 15mm.

Accessories(Optional parts)

Divider DVI series
See page NANUK-ACC-1

Aluminium panel NKAP series
See page NKAP-1～NKAP-2

Shoulder strap NSTP series
See page NANUK-ACC-3

Padlock AB145S series
See page NANUK-ACC-3

Nameplate sticker NKST series
See page NANUK-ACC-3

■ Standard Type and Foam Type are available.

Standard Type

Foam Type

※See page NANUK-ACC-2 pages for optional NKSP foam.

NK dimensions

■ Drawings below are reference examples only.

DXF/DWG/PDF drawings available on our website.

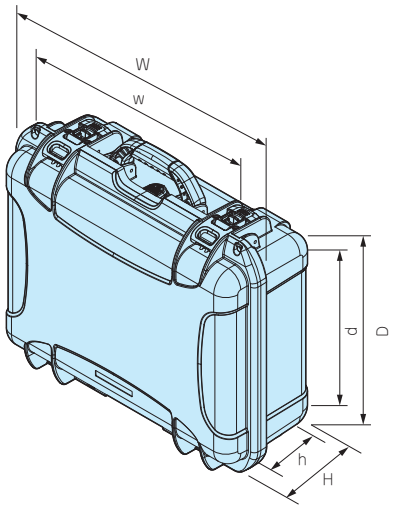

Product no. / Dimensions

■Standard type (without foam)

Product no.		Dimensions (External)			Dimensions (Internal)			Weight (kg)
● Black	● Yellow	W	D	H	w	d	h	
NK903B	NK903Y	231	173	97	180	114	79	0.6
NK904B	NK904Y	259	201	114	200	135	94	0.7
NK905B	NK905Y	318	257	152	220	170	131.5	1.6
NEW NK908B	NEW NK908Y	318	249	203	215	165	181	1.5
NEW NK909B	NEW NK909Y	321	229	111	268	151	86	1.0
NK910B	NK910Y	363	282	120	320	210	95.5	1.4
NK915B	NK915Y	393.5	307	173	320	210	152	2.1
NK918B	NK918Y	427	328	236	350	215	212	2.9
NK920B	NK920Y	424	340	173	360	240	152	2.4
NEW NK923B	NEW NK923Y	472	366	160	391	253	128	2.7
NK925B	NK925Y	475	376	178	410	270	159	2.9
NK930B	NK930Y	503	406	193	430	310	171	3.4
NK933B	NK933Y	503	409	254	430	300	233	3.9
NK935B	NK935Y	559	356	229	415	265	179	5.3
NK940B	NK940Y	557	429	216	480	320	197	3.9
NK945B	NK945Y	638	505	224	530	400	202	5.0
NK950B	NK950Y	579	465	297	420	360	247	7.0
NK960B	—	645	508	368	470	365	316	9.0

■Foam type (with foam)

Product no.		Dimensions (External)			Dimensions (Internal)			Weight (kg)
● Black	● Yellow	W	D	H	w	d	h	
NK903BS	NEW NK903YS	231	173	97	180	114	79	0.63
NK904BS	NEW NK904YS	259	201	114	200	135	94	0.81
NK905BS	NEW NK905YS	318	257	152	220	170	131.5	1.7
NEW NK908BS	NEW NK908YS	318	249	203	215	165	181	1.7
NEW NK909BS	NEW NK909YS	321	229	111	268	151	86	1.2
NK910BS	NEW NK910YS	363	282	120	320	210	95.5	1.5
NK915BS	NEW NK915YS	393.5	307	173	320	210	152	2.4
NK918BS	NEW NK918YS	427	328	236	350	215	212	2.9
NK920BS	NEW NK920YS	424	340	173	360	240	152	2.7
NEW NK923BS	NEW NK923YS	472	366	160	391	253	128	3.1
NK925BS	NEW NK925YS	475	376	178	410	270	159	3.3
NK930BS	NEW NK930YS	503	406	193	430	310	171	3.9
NK933BS	NEW NK933YS	503	409	254	430	300	233	4.6
NK935BS	NEW NK935YS	559	356	229	415	265	179	6.0
NK940BS	NEW NK940YS	557	429	216	480	320	197	4.6
NK945BS	NEW NK945YS	638	505	224	530	400	202	6.0
NK950BS	NEW NK950YS	579	465	297	420	360	247	8.0
NK960BS	—	645	508	368	470	365	316	10.5

NKK SERIES IP65 CARRYING CASE with LOCK

NEW SIZE

- Equipped with a TSA lock latch for security, or transportation as check-in baggage.
- Available in 15 different sizes, with 2 different types available Without foam and With foam.
- Optional aluminium panel can turn the NKK series into your own original controller, measuring device or transmitter.

IP65

Technical Data
Protection class : IP65 Operating temperature : -20℃～+60℃

Latch with TSA lock

2 Keys included.

What is TSA LOCK?

TSA LOCK is a global security system which allows passengers to lock their luggage, while at the same time, permitting security authorities to inspect them without damage to the lock or luggage.

TRAVEL SENTRY® APPROVED

Accessories(Optional parts)

Divider DVI series
See page NANUK-ACC-1

Aluminium panel NKAP series
See page NKAP-1～NKAP-2

Shoulder strap NSTP series
See page NANUK-ACC-3

Foam NKSP series
See page NANUK-ACC-2

Nameplate sticker NKST series
See page NANUK-ACC-3

Hinge pin shape varies based on model type

Components

No.	Part name	Material
1	Cover・Base	Reinforced PP (NK-7)
2	Latch	Nylon 66・Zinc alloy
3	Handle grip	Elastomer
4	Pressure release valve (※1)	Nylon 66・PTFE
5	Hinge pin	Stainless steel

No.	Part name	Material
6	Gasket	EPDM
7	Foam	Polyurethane / 12.7mm Pitch Pre-cut cubed foam (※2)
8	Key	Brass・PP

※1 Automatic pressure release valve enables pressure within the case to be equalized with the surrounding, allowing it to be opened with ease, while keeping it waterproof.

※2 Pitch of Pre-cut cubed foam for NK940, 945, and 950 models is 15mm.

NKK945 and NKK960 models

Only 2 latches (below illustration) are equipped with TSA lock (out of 4 latches).

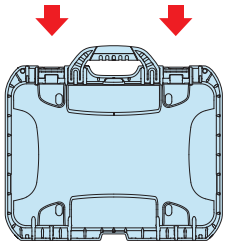

NKK990 model

Only 2 latches (below illustration) are equipped with TSA lock (out of 4 latches).

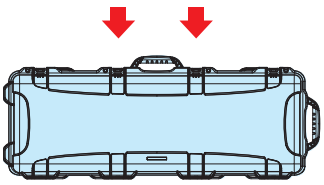

Product no. / Dimensions

■Standard type (without foam)

Product no.	Dimensions (External)			Dimensions (Internal)			Weight (kg)
● Black	W	D	H	w	d	h	
NKK905B	318	257	152	220	170	131.5	1.6
NEW NKK908B	318	249	203	215	165	181	1.5
NKK915B	393.5	307	173	320	210	152	2.1
NKK918B	427	328	236	350	215	212	2.9
NKK920B	424	340	173	360	240	152	2.4
NEW NKK923B	472	366	160	391	253	128	2.7
NKK925B	475	376	178	410	270	159	2.9
NKK930B	503	406	193	430	310	171	3.4
NKK933B	503	409	254	430	300	233	3.9
NKK935B	559	356	229	415	265	179	5.3
NKK940B	557	429	216	480	320	197	3.9
NKK945B	638	505	224	530	400	202	5.0
NKK950B	579	465	297	420	360	247	7.0
NKK960B	645	508	368	470	365	316	9.0
NEW NKK990B	1,196	440	168	1,070	340	143.5	8.3

■Foam type (with foam)

Product no.	Dimensions (External)			Dimensions (Internal)			Weight (kg)
● Black	W	D	H	w	d	h	
NEW NKK905BS	318	257	152	220	170	131.5	1.7
NEW NKK908BS	318	249	203	215	165	181	1.7
NEW NKK915BS	393.5	307	173	320	210	152	2.4
NEW NKK918BS	427	328	236	350	215	212	2.9
NEW NKK920BS	424	340	173	360	240	152	2.7
NEW NKK923BS	472	366	160	391	253	128	3.1
NEW NKK925BS	475	376	178	410	270	159	3.3
NEW NKK930BS	503	406	193	430	310	171	3.9
NEW NKK933BS	503	409	254	430	300	233	4.6
NEW NKK935BS	559	356	229	415	265	179	6.0
NEW NKK940BS	557	429	216	480	320	197	4.6
NEW NKK945BS	638	505	224	530	400	202	6.0
NEW NKK950BS	579	465	297	420	360	247	8.0
NEW NKK960BS	645	508	368	470	365	316	10.5
NEW NKK990BS	1,196	440	168	1,070	340	143.5	9.8

NKK dimensions

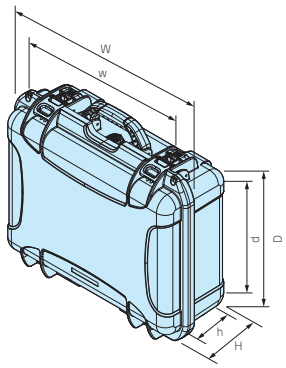

NK • NKK dimensions

■ DXF/DWG/PDF drawings available on our website.

NK 903

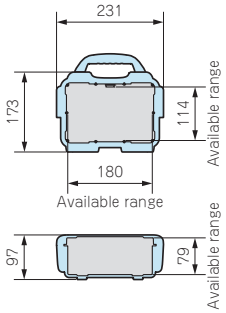

NK 904

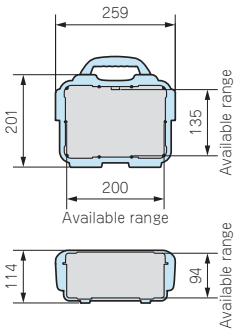

NK/NKK 905

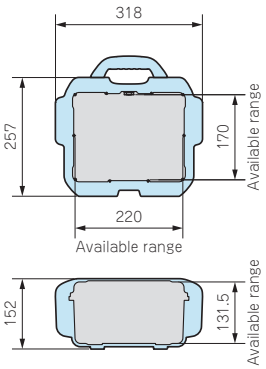

NK/NKK 908 NEW

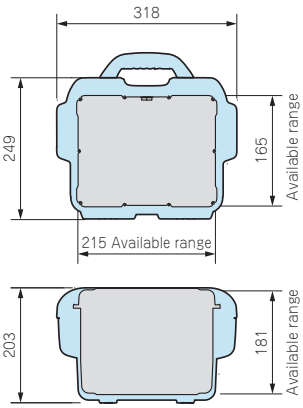

NK • NKK-1

NK • NKK dimensions

■ DXF/DWG/PDF drawings available on our website.

NK 909 NEW

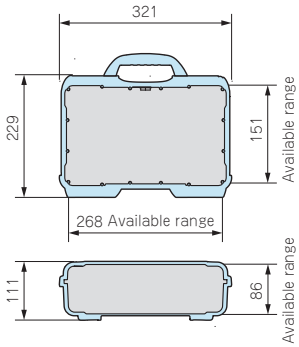

NK 910

NK910 is able to install optional aluminium panels on both the cover and base. (See page NKAP-1～NKAP-2)

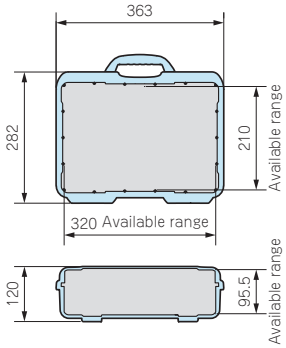

NK/NKK 915

APPLICATION EXAMPLE

EDUCATIONAL TABLET AID PACK
Product by FUJISOFT (Japan)

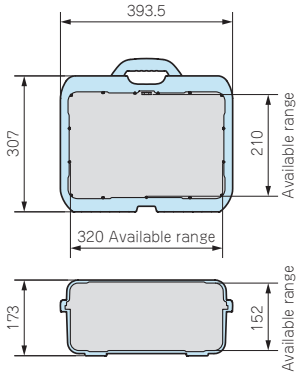

NK/NKK 918

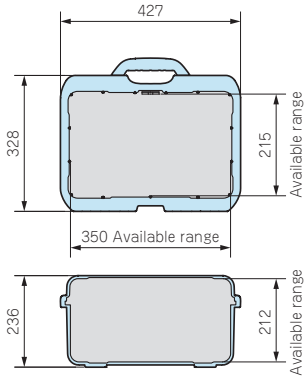

■ DXF/DWG/PDF drawings available on our website.

NK/NKK 920

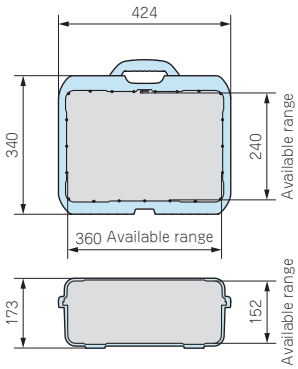

NK/NKK 923 NEW

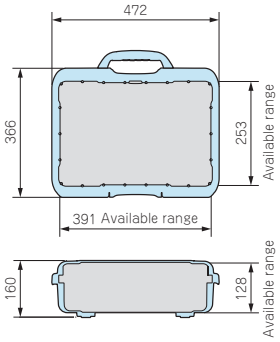

NK/NKK 925

APPLICATION EXAMPLE

ELECTRIC PROSPECTING / LOGGING DEVICE
Product by OYO CORPORATION (Japan)

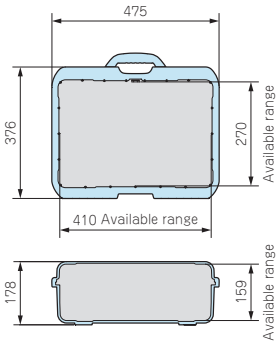

NK • NKK dimensions

■ DXF/DWG/PDF drawings available on our website.

NK/NKK 930

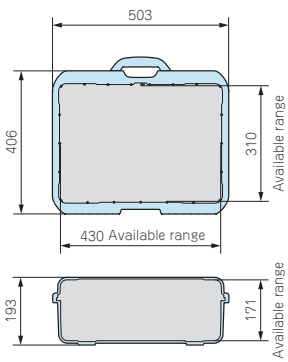

APPLICATION EXAMPLE

PRESS BREAK CHECKER
Product by Shinohara Press Service (Japan)

NK/NKK 933

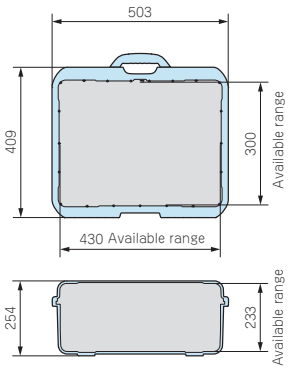

NK/NKK 935

Equipped with a 2 stage retractable handle and polyurethane wheels.

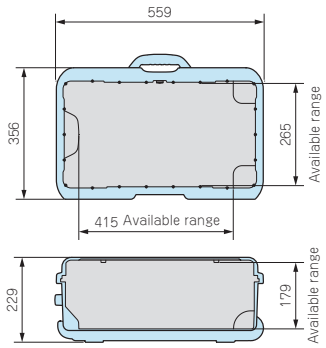

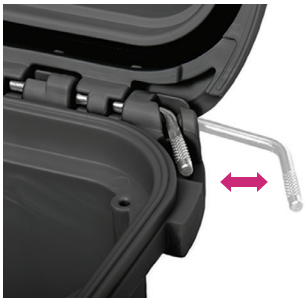

Cover can be detached by pulling out the hinge pin.
※Hinge pin shape varies based by model type.

■ DXF/DWG/PDF drawings available on our website.

NK/NKK 940

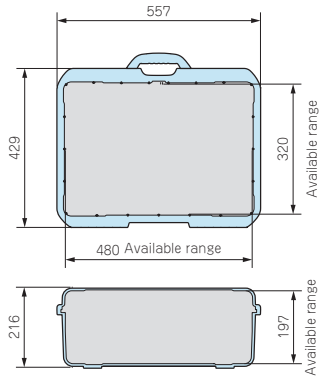

NK/NKK 945

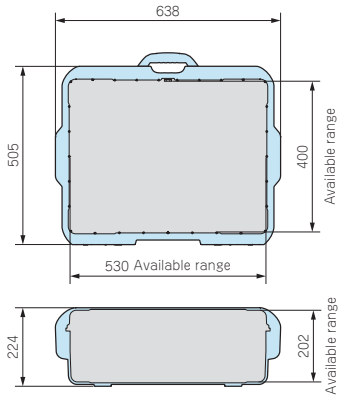

NK/NKK 950

Equipped with a 2 stage retractable handle
and polyurethane wheels.

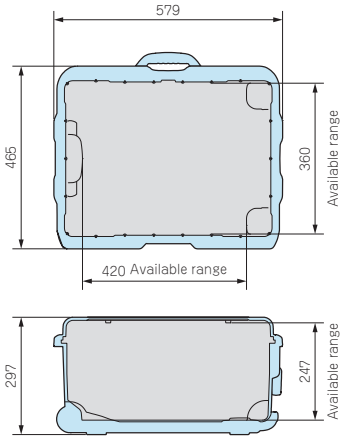

NK・NKK dimensions

■ DXF/DWG/PDF drawings available on our website.

NK/NKK 960

※ ( ) values are for NK・NKK935 and 950 models.

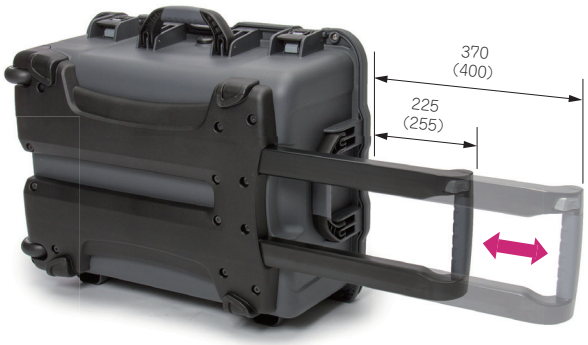

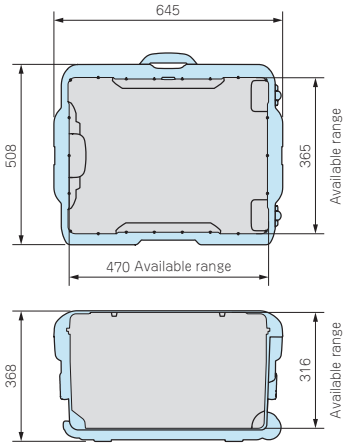

Equipped with a 2 stage retractable handle
and polyurethane wheels.

NKK 990

Equipped with polyurethane wheels.

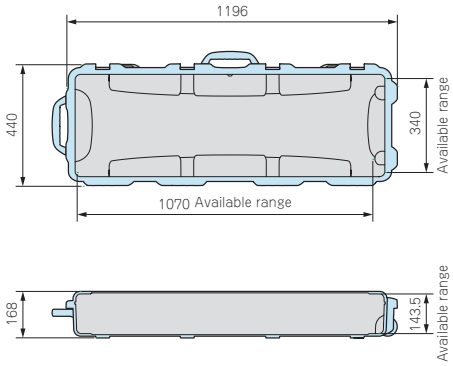

TAKACHI

NANO SERIES WATERPROOF PORTABLE CASE

- IP65 waterproof compact and stylish case.
- Slit holes on both sides for strap or belt.
- Suitable for storing small electric devices such as mobile phones, wireless devices, portable radios, and so on.

IP65

Technical Data
Protection class : IP65 Operating temperature : -20℃～+60℃

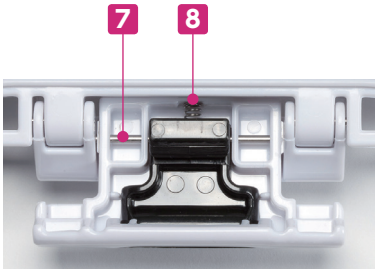

Latch (lock mechanism) side

Hinge Side

Components

No.	Part name	Material
1	Cover・Base	Polycarbonate
2	Protective net	Silicone
3	Lock lever	Polycarbonate
4	Corner guard	Elastomer
5	Gasket	Elastomer
6	Strap	Nylon・Nylon 66
7	Latch pin	Stainless steel
8	Spring	Stainless steel
9	Pressure relief valve (※)	Nylon 66・PTFE

※ Waterproof pressure relief valve enables pressure within the case to be equalized with the surrounding, allowing it to be opened with ease, while keeping it waterproof.

●How To Use Strap

Insertion of clip into the case

Use as handy strap

Insert strap end into the loop after clip insertion.

Fix it to the belt loop, etc.

NANO dimensions

■ Drawings below are reference examples only.
DXF/DWG/PDF drawings available on our website.

NANO 310

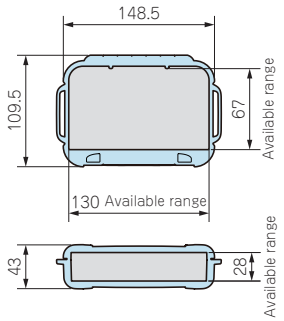

NANO 320

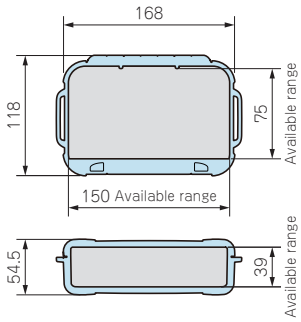

NANO 330

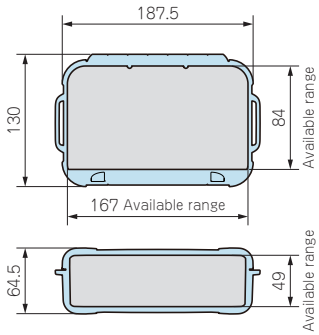

Product no. / Dimensions

Product no.					Dimensions (External)			Dimensions (Internal)			Weight (g)
● Black	● White	▨ Clear	● Lime	● Marine	W	D	H	w	d	h	
NANO310B	NANO310W	NANO310C	NANO310L	NANO310M	148.5	109.5	43	130	67	28	265
NANO320B	NANO320W	NANO320C	NANO320L	NANO320M	168	118	54.5	150	75	39	350
NANO330B	NANO330W	NANO330C	~~NANO330L~~	~~NANO330M~~	187.5	130	64.5	167	84	49	450

※Cross out products are discontinued.

Applicable for use as electronic and communication devices

PCB can be installed with PCB mounting screw MT series.
NANO series can also be used as a pole mounted communication device.

Accessories(Optional parts)

Aluminium panel NKAP series
See page NKAP-1～NKAP-2

PCB mounting screw MT series
See page NKAP-1

Nameplate sticker NKST series
See page NANUK-ACC-3

NKAP SERIES ALUMINIUM PANEL for NANO • NK • NKK

NEW SIZE

- Optional aluminium panel can be used as a controller control / display, measuring device, transmitter, and so on.

NKAP dimensions

- Drawings below are reference examples only. DXF/DWG/PDF drawings available on our website.

NANO series

Slide insert and screw fastening

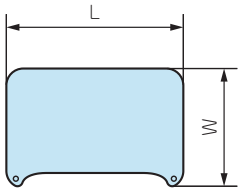

NK • NKK series

Required screws vary based on size

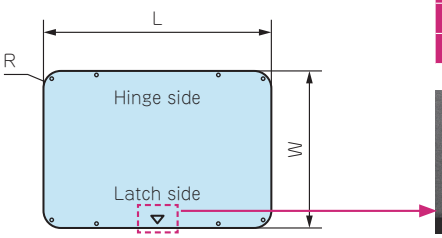

※Install panel with ▽marking towards the latch.

Components

No.	Part name	Material
1	Panel	Aluminium (Anodized)
2	Screw	Stainless steel

Product no. / Dimensions

Product no.	Suitable case	Thickness	L	W	R	▽ marking	Screw pcs	Weight (g)
NKAP310	NANO310	2	136.2	90.6	13	—	2	59
NKAP320	NANO320	2	156.8	100.4	15.7	—	2	75
NKAP330	NANO330	2	175.9	112.2	17	—	2	94
NKAP903	NK903	1.5	198.5	136.5	15	—	4	109
NKAP904	NK904	1.5	226	163.5	18	—	4	149
NKAP905	NK/NKK905	1.5	257	207	21.5	—	4	214
NEW NKAP908	NK/NKK908	1.5	250.9	200.1	18	—	4	203
NEW NKAP909	NK909	1.5	304.7	190.4	18	—	4	234
NKAP910	NK910 base side	2	346	244.5	17	—	4	452
NKAP910C	NK910 cover side	1.5	339.5	238	14	—	4	329
NKAP915	NK / NKK915	2	368.5	254	28	○	8	496
NKAP918	NK / NKK918	2	397.5	268.5	27	—	8	574
NKAP920	NK / NKK920	2	399.5	285	28	○	8	606
NEW NKAP923	NK / NKK923 base side	2	446.3	309.1	28	—	8	737
NEW NKAP923C	NK / NKK923 cover side	2	438.3	301.1	23.5	—	8	704
NKAP925	NK/NKK925	2	451.5	318	28	○	8	760
NKAP930	NK/NKK930	2	476	350.5	27	○	8	880
NKAP933	NK/NKK933	2	477.5	352	27	—	8	908
NKAP935	NK/NKK935	2	535	301.5	26.5	○	8	855
NKAP940	NK/NKK940	2	526.5	374	27	○	10	1,050
NKAP945	NK/NKK945	2	576.5	450	26.5	○	10	1,395
NEW NKAP950	NK/NKK950	2	540.8	409.1	27	—	10	1,179
NEW NKAP960	NK/NKK960	2	579.7	454.2	27	—	10	1,402

MT SERIES PCB MOUNTING SCREW for NANO

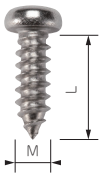

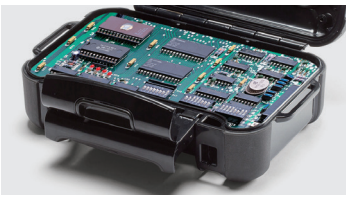

- PCB should be the same size as NKAP series aluminium panel.
- Insert PCB into groove (see diagram to the right) and screw into the screw marking.

Product no. / Dimensions

Product no.	M	L	Pcs
MT2.6-8T	2.6	8	2

Material : Stainless steel

CUSTOMIZATION on ALUMINIUM PANEL

- Customization services such as CNC milling, punching press, digital inkjet printing, silkscreen printing, and engraving on NKAP panel are available.
- Custom colors can also be performed either through anodization, or painting.

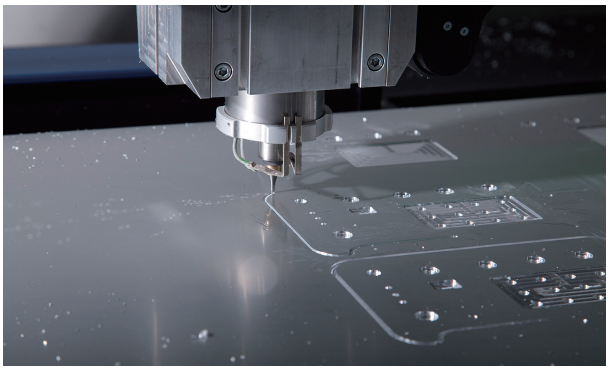

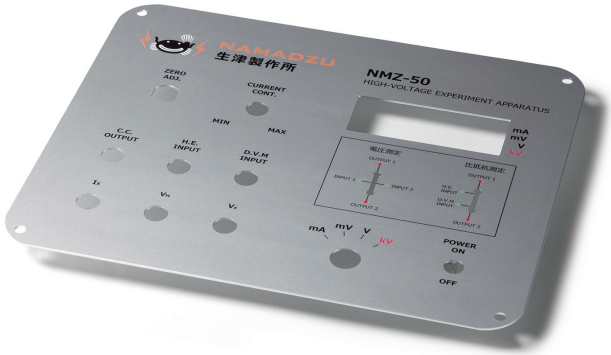

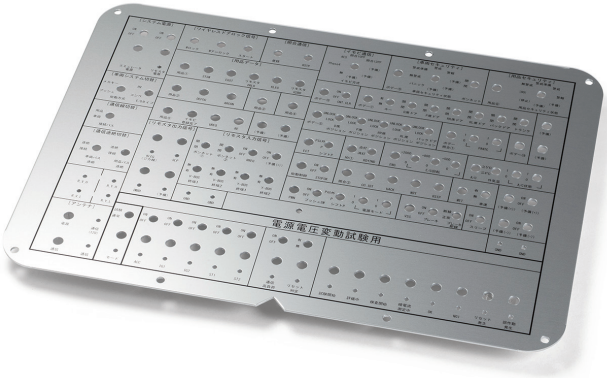

- Self-clinching Standoff/Stud/Nut or Welded Fastener customization is available.

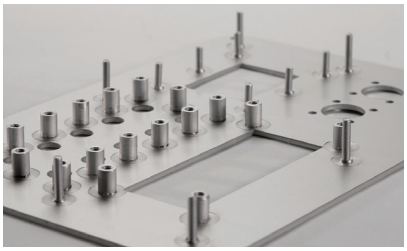

- An original control panel with machined aluminum panel and overlay sheet can be performed.

DVI SERIES DIVIDER for NK • NKK

NEW SIZE

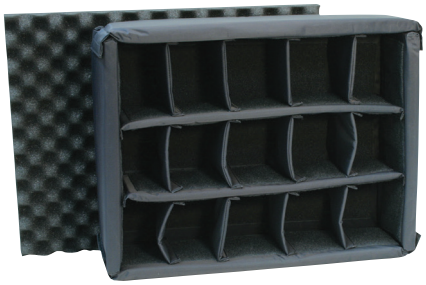

- Divider for organizing your components or equipment. Adjustable hook and loop fasteners allows for easily size adjustments.
- Padded dividers are designed to easily organize and protect your equipment.

APPLICATION EXAMPLE

Product no. / Suitable case

Product no.	Suitable case	Weight (g)
DVI905	NK/NKK905	288
NEW DVI908	NK/NKK908	453
DVI915	NK/NKK915	542
DVI918	NK/NKK918	800
DVI920	NK/NKK920	753
NEW DVI923	NK/NKK923	1,025
DVI925	NK/NKK925	968
DVI930	NK/NKK930	1,220
DVI933	NK/NKK933	1,500
DVI935	NK/NKK935	1,190
DVI940	NK/NKK940	1,695
DVI945	NK/NKK945	1,940
DVI950	NK/NKK950	1,810
DVI960	NK/NKK960	3,230

DVI905 / 908

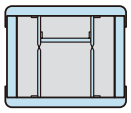

DVI915 / 918

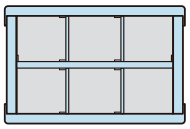

DVI920

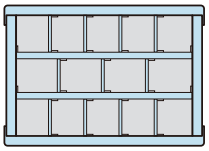

DVI923 / 925

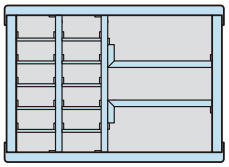

DVI930 / 933

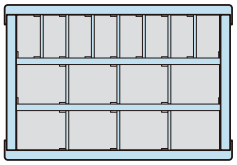

DVI935

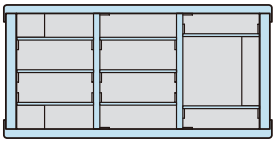

DVI940

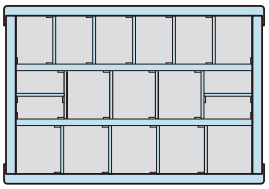

DVI945

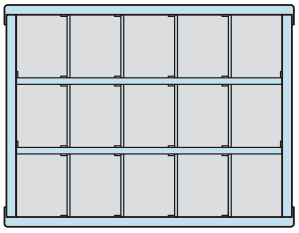

DVI950

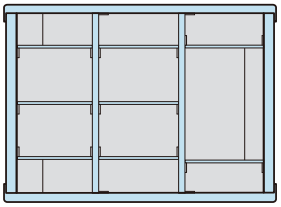

DVI960 ※2 divider layers available.

▼1st layer

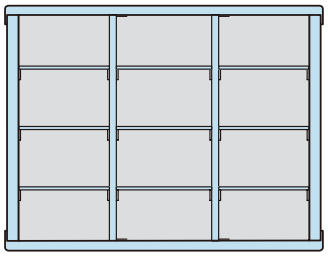

▼2nd layer

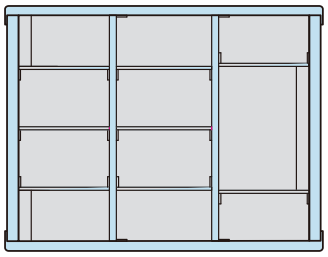

NKSP SERIES SPONGE FOAM for NK・NKK

NEW SIZE

- Pre-cubed foam can be easily cut to make a suitable storage space.
- Available as three-layered foam set with waved (for cover side), pre-cubed foam (for base side) and base layer.

※ Pre-cubed foam layer is not available for NKSP990 model.

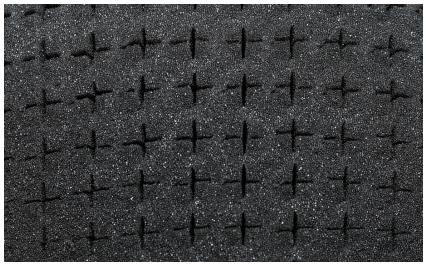

■ Drawings below are reference examples only.
DXF/DWG/PDF drawings available on our website.

Product no. / Suitable case

Product no.	Suitable case	Foam layer details	Cut-line pitch	Weight（g）
NKSP903	NK903	Waved layer x 1・Pre-cubed foam layer x 1・Base layer x 1	12.7	40
NKSP904	NK904	Waved layer x 1・Pre-cubed foam layer x 1・Base layer x 1	12.7	70
NKSP905	NK/NKK905	Waved layer x 1・Pre-cubed foam layer x 1・Base layer x 1	12.7	120
NEW NKSP908	NK/NKK908	Waved layer x 1・Pre-cubed foam layer x 2・Base layer x 1	12.7	158
NEW NKSP909	NK909	Waved layer x 1・Pre-cubed foam layer x 1・Base layer x 1	12.7	158
NKSP910	NK910	Waved layer x 1・Pre-cubed foam layer x 1・Base layer x 1	12.7	150
NKSP915	NK/NKK915	Waved layer x 1・Pre-cubed foam layer x 2・Base layer x 1	12.7	250
NKSP918	NK/NKK918	Waved layer x 1・Pre-cubed foam layer x 3・Base layer x 1	12.7	390
NKSP920	NK/NKK920	Waved layer x 1・Pre-cubed foam layer x 2・Base layer x 1	12.7	320
NEW NKSP923	NK/NKK923	Waved layer x 1・Pre-cubed foam layer x 2・Base layer x 1	12.7	399
NKSP925	NK/NKK925	Waved layer x 1・Pre-cubed foam layer x 2・Base layer x 1	12.7	430
NKSP930	NK/NKK930	Waved layer x 1・Pre-cubed foam layer x 2・Base layer x 1	12.7	540
NKSP933	NK/NKK933	Waved layer x 1・Pre-cubed foam layer x 3・Base layer x 1	12.7	700
NKSP935	NK/NKK935	Waved layer x 1・Pre-cubed foam layer x 2・Base layer x 1	12.7	710
NKSP940	NK/NKK940	Waved layer x 1・Pre-cubed foam layer x 2・Base layer x 1	15	730
NKSP945	NK/NKK945	Waved layer x 1・Pre-cubed foam layer x 2・Base layer x 1	15	1,000
NKSP950	NK/NKK950	Waved layer x 1・Pre-cubed foam layer x 3・Base layer x 1	15	1,000
NKSP960	NK/NKK960	Waved layer x 1・Pre-cubed foam layer x 4・Base layer x 1	12.7	1,500
NKSP990	NKK990	Waved layer x 1・Plain foam layer x 2・Base layer x 1	—	1,490

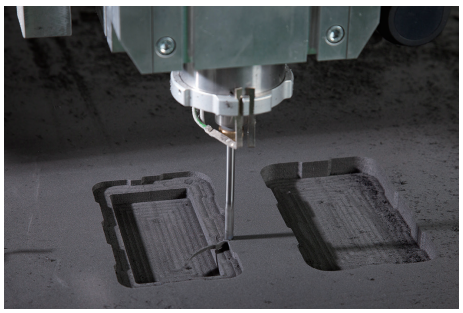

CUSTOMIZE

- Customization on foam is available.
- Foam customization is also available where your own unique form design and cut-outs can be performed.

CUSTOMIZED EXAMPLE

NSTP SERIES SHOULDER STRAP

■ Nylon shoulder strap with polyurethane pads to reduce fatigue when carrying.

Components

No.	Part name	Material
1	Belt	Nylon
2	Pad	Neoplane・Polyurethane
3	Hook	Steel (Black painted)

Product no. / Feature

Product no.	Weight (g)	Quantity
NSTP810	238	1

※Belt length can be adjustable from 810mm to 1,170mm
※Not applicable for NK903, NK904, NKK990, NK・NKK950 and NK・NKK960 models.

AB145S SERIES PADLOCK

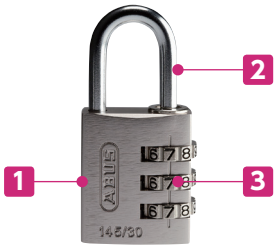

Components

No.	Part name	Material
1	Body	Aluminium
2	Shank	Steel
3	Dial	Zinc alloy

Product no. / Feature

Product no.	Weight (g)	Quantity
AB145S	52	1

NKST SERIES NAMEPLATE STICKER

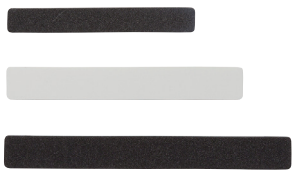

Color nameplate can be performed by digital inkjet printing on a white plate.

■ 0.3mm thick plastic nameplate with double sided tape on the back.
Custom name plate can be made with your company name, logo, product number or lot number with digital inkjet printing.

■ Digital inkjet print or silkscreen is possible from just 1 piece.

Product no. / Dimensions

Product no.		Suitable case	Dimensions		Quantity
● Black	● White		A	B	
NKST-1B	NKST-1W	NANO SERIES	50	6.8	1
NKST-2B	NKST-2W	NK903, 904	62.7	9.1	1
NKST-3B	NKST-3W	NK/NKK905 ～ 960	76.1	9.1	1

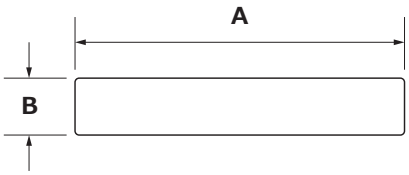

UNIQUE COLOR AVAILABLE

NANO SERIES

※See page NANO-1～NANO-2

Orange

Purple

Red

NK SERIES

※See page NK-1～NK-2

Graphite

Orange

Olive

Silver
Only available for
NK903～920
NK925～945 models

Lime
Only available for
NK903, 904, 905
908 and 910 models

Blue
Only available for
NK903 and 904
Models

Red
Only available for
NK903 and 904
Models

●For NKK series, Olive color is only available for NKK990 model.

TAKACHI

CNC Foam Milling

Customize based on how you want it to be!

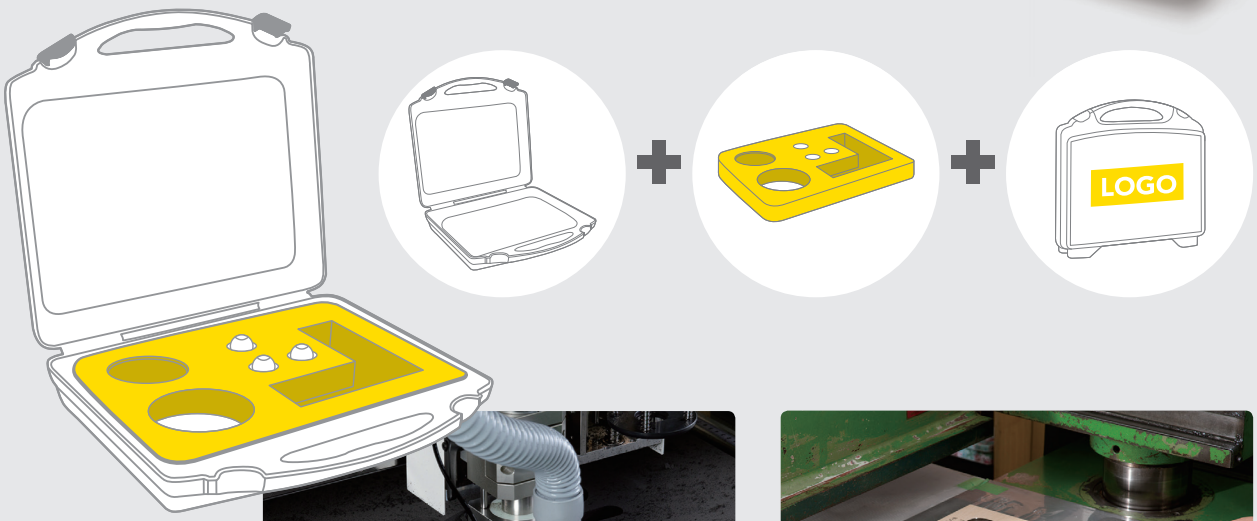

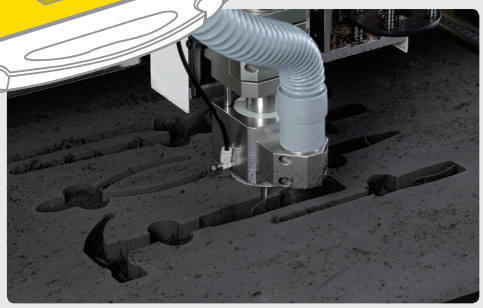

CNC foam cutting machine enables quick and cost-effective hole milling service.

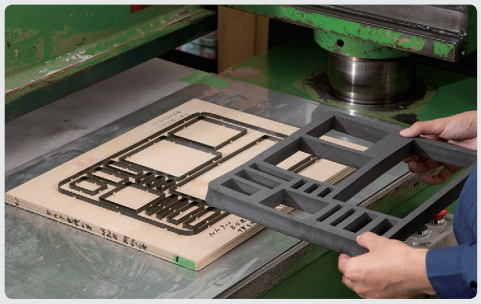

For mass production, cost-effective mold press cutting is also available.

APPLICATION EXAMPLE

CNC Machining • Printing Service for Case

CNC Machining

■ CNC machining for your switch, connector, display and so on is possible from just 1 piece.

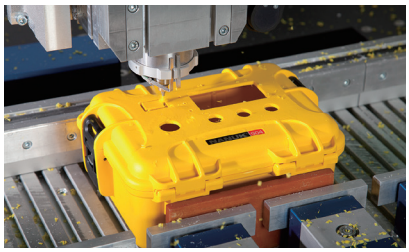

Printing Service

■ Digital inkjet printing, silkscreen printing and nameplate sticker printing is possible from just 1 piece.

Low initial cost
No plate processing fee

Inkjet printing

Low printing cost for small quantities.

- Data adjustment fees may be charged again if significant changes are required on your repeat order.
- If the data in recommended format is provided

Data adjustment fees

- Data or images other than recommended formats

Data creation fees + Data adjustment fees

Silk-screen initial tooling

Low printing cost for large quantity single color print.

Silk-screen initial tooling

Plate making	Silk-screen making

Recommended data formats

PDF (.pdf -100%)	Vector file (.ai)	EPS (.eps)

Initial cost can be reduced with the recommended formats.

Able to Inkjet print on rigid urethane foam.

APPLICATION EXAMPLE