AUR series 19” RACK MOUNT ENCLOSURE

NEW

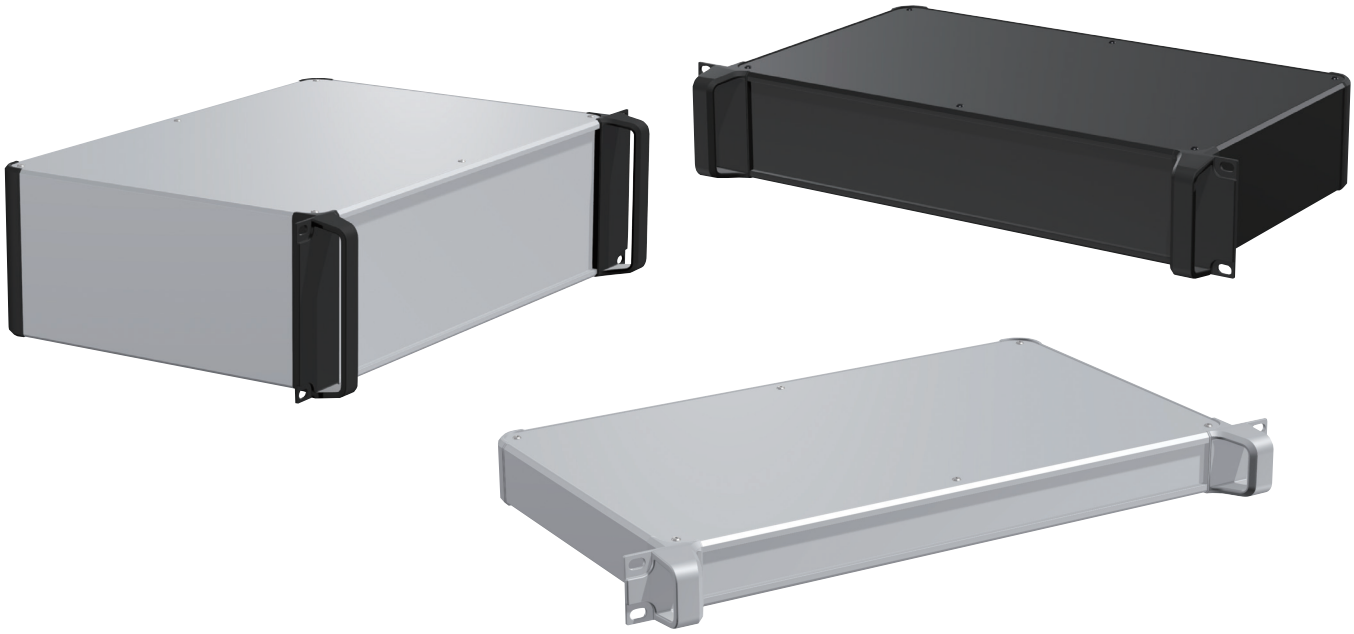

- 19” rack mount enclosure with insertion type front/rear panels, giving it a beautiful appearance.
- A large selection of 35 different sizes in 4 different colors to choose from.
- Suitable for use as audio/visual equipment, communication equipment, rack mount computers, measuring instruments and more.

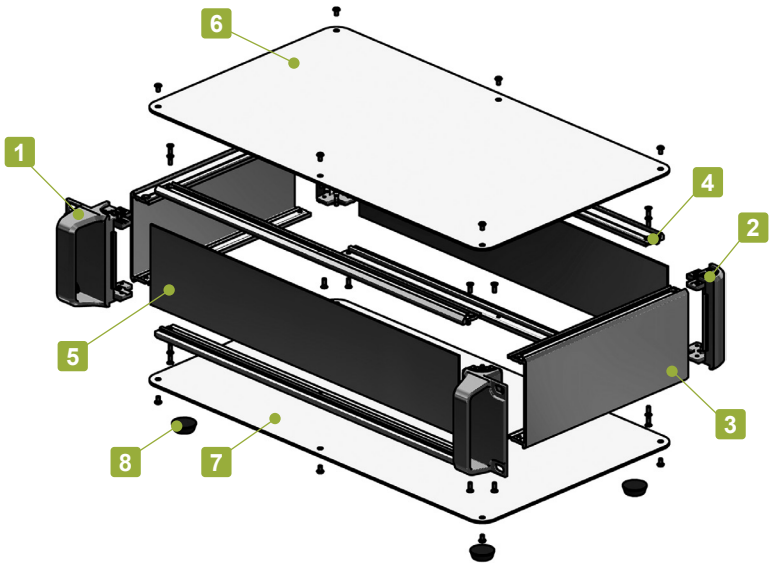

Included screws
- Top / Bottom cover
  M3-5 original trapezoid head & Nickel plated x 8~16 pcs
- Frame
  M3-8 flat head & Nickel plated x 16 pcs

Recommended torque : 0.3 ~ 0.6N • m
* Recommended torque listed is for reference only; actual may differ. Assemble after testing torque.

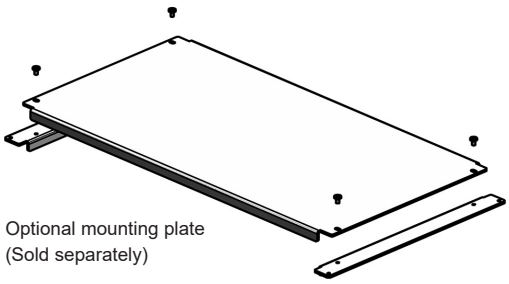

Optional mounting plate
(Sold separately)

Components

No.	Part name	Pcs	Material	Color / Finish
1	Handle Corner Block	2	Diecast aluminium ADC12	Silver • Black / Painted (Unfinished inside)
2	Corner block	2	Diecast aluminium ADC12	Silver • Black / Painted (Unfinished inside)
3	Frame	2	Extruded aluminium A6063S-T5	Silver • Black / Anodized with clear coating
4	Panel support frame	4	Extruded aluminium A6063S-T5	Silver • Black / Anodized with clear coating
5	Panel	2	Aluminium A1100P	Silver • Black / Anodized
6	Top cover	1	Aluminium A1100P	Silver • Black / Anodized
7	Bottom cover	1	Aluminium A1100P	Silver • Black / Anodized
8	Rubber feet	4	Synthetic rubber	Black

To select Screw and Color, follow steps 1 ~ 2 below to determine product number.

1 Screw

P Plus (Silver / Nickel plated) (Black / Black trivalent chromate)

H Hex (Silver / Nickel plated) (Black / Black trivalent chromate)

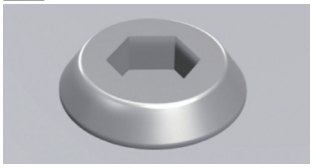

Hex wrench included.

*Color of screw will be the same as top • bottom cover color.

2 Color

Please choose from the color combinations listed below.

S S

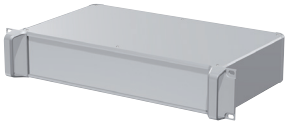

S B

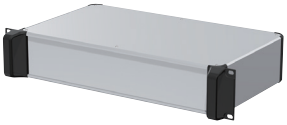

B S

B B

Product Number

To determine a product number, fill H-W-D dimensions and select Screw and Color code in the following blank boxes.

AUR □ - □ - □ □ - □ □

H-W-D dimensions	Screw	Color
See below for dimensions / product no.	(P or H)	(SS • SB • BS • BB)

Numbering example : If looking at "H88 x W430 x D250mm, Screw type H, Color type BS"

➡ AUR 88-43-25 H-BS

Product no. / Details

■ Please suffix screw and color code at the end of the product number.

Product no.	H	W	D	Weight (kg)
AUR 44-43-16□-□□	44	430	160	1.5
AUR 44-43-20□-□□	44	430	200	1.8
AUR 44-43-25□-□□	44	430	250	2.0
AUR 44-43-30□-□□	44	430	300	2.3
AUR 44-43-36□-□□	44	430	360	2.7
AUR 44-43-43□-□□	44	430	430	3.1
AUR 44-43-50□-□□	44	430	500	3.5
AUR 88-43-16□-□□	88	430	160	1.9
AUR 88-43-20□-□□	88	430	200	2.1
AUR 88-43-25□-□□	88	430	250	2.5
AUR 88-43-30□-□□	88	430	300	2.8
AUR 88-43-36□-□□	88	430	360	3.2
AUR 88-43-43□-□□	88	430	430	3.6
AUR 88-43-50□-□□	88	430	500	4.1
AUR133-43-16□-□□	132.5	430	160	2.3
AUR133-43-20□-□□	132.5	430	200	2.6
AUR133-43-25□-□□	132.5	430	250	2.9
AUR133-43-30□-□□	132.5	430	300	3.3
AUR133-43-36□-□□	132.5	430	360	3.7
AUR133-43-43□-□□	132.5	430	430	4.2
AUR133-43-50□-□□	132.5	430	500	4.7
AUR177-43-16□-□□	177	430	160	2.6
AUR177-43-20□-□□	177	430	200	2.9
AUR177-43-25□-□□	177	430	250	3.3
AUR177-43-30□-□□	177	430	300	3.7
AUR177-43-36□-□□	177	430	360	4.2
AUR177-43-43□-□□	177	430	430	4.7
AUR177-43-50□-□□	177	430	500	5.3

Product no.	H	W	D	Weight (kg)
AUR222-43-16□-□□	221.5	431	161	2.9
AUR222-43-20□-□□	221.5	431	201	3.3
AUR222-43-25□-□□	221.5	431	251	3.7
AUR222-43-30□-□□	221.5	431	301	4.1
AUR222-43-36□-□□	221.5	431	361	4.7
AUR222-43-43□-□□	221.5	431	431	5.3
AUR222-43-50□-□□	221.5	431	501	5.9

AUR dimensions

■ DXF/DWG/PDF/STP drawings available on our website.

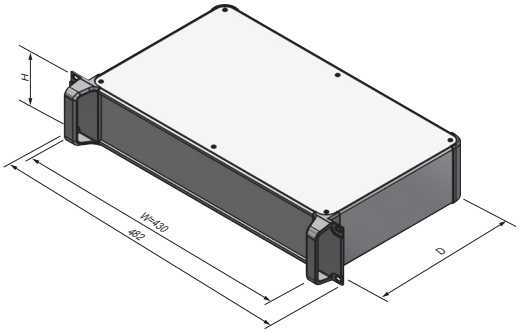

Accessories (Optional parts)

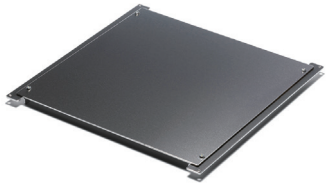

Mounting plate AUC series
See page 340

Rack mounting screw RT series
See website

Rack mounting screw RZ series
See website

AUPR series 19” RACK MOUNT ENCLOSURE WITH DETACHABLE PANELS

NEW

Conductive

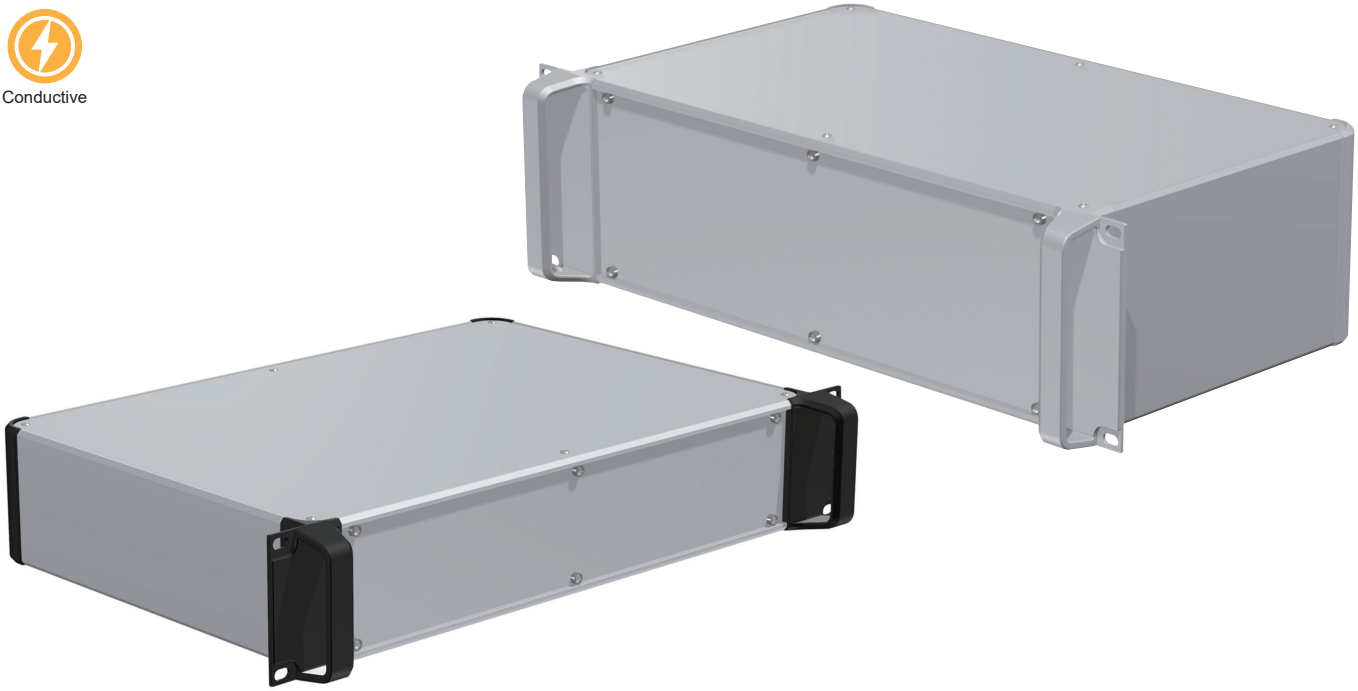

- 19” rack mount enclosure with detachable panels.
- The inner surface is unfinished, allowing the enclosure to be conductive.
- A large selection of 28 different sizes in 2 different colors to choose from.
- Suitable for use as audio/visual equipment, communication equipment, rack mount computers, measuring instruments and more.

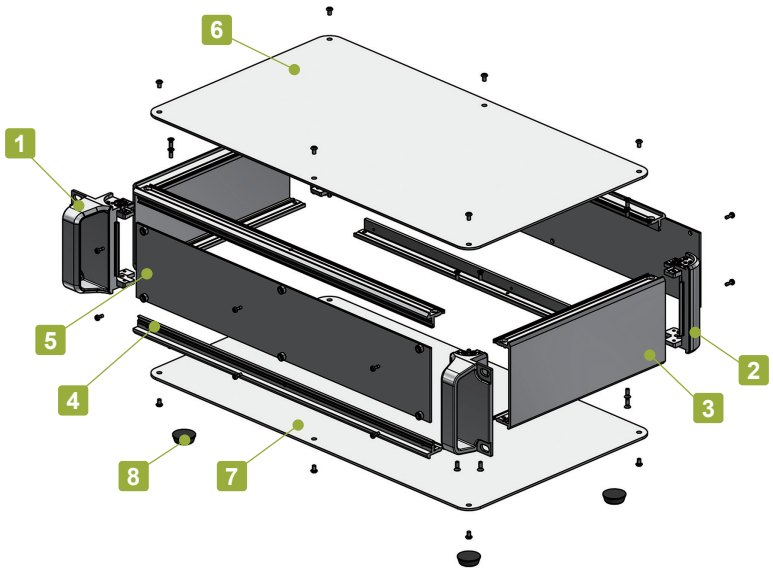

Included screws
- Top / Bottom cover
  M3-5 original trapezoid head & Nickel plated x 8~16 pcs
- Frame
  M3-8 flat head & Nickel plated x 16 pcs
- Panel
  M2.5-7 pan head & Nickel plated x 12 pcs

Recommended torque : M2.5 : 0.15 ~ 0.2N • m
M3 : 0.3 ~ 0.6N • m

* Recommended torque listed is for reference only; actual may differ. Assemble after testing torque.

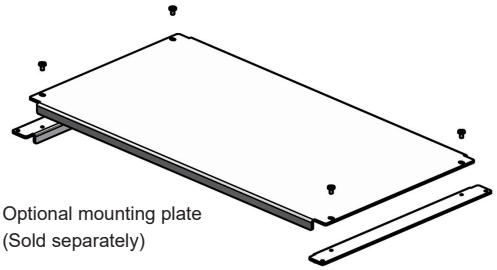

Optional mounting plate
(Sold separately)

Components

No.	Part name	Pcs	Material	Color / Finish
1	Handle corner block	2	Diecast aluminium ADC12	Silver • Black / Painted (Unfinished inside)
2	Corner block	2	Diecast aluminium ADC12	Silver • Black / Painted (Unfinished inside)
3	Frame	2	Extruded aluminium A6063S-T5	Silver / Painted (Unfinished inside)
4	Panel support frame	4	Extruded aluminium A6063S-T5	Silver / Painted (Unfinished inside)
5	Panel	2	Aluminium A1100P	Silver / Painted (Conductive inside)
6	Top cover	1	Aluminium A1100P	Silver / Painted (Conductive inside)
7	Bottom cover	1	Aluminium A1100P	Silver / Painted (Conductive inside)
8	Rubber feet	4	Synthetic rubber	Black

To select Screw and Color, follow steps 1 ~ 2 below to determine product number.

1 Screw

P Plus (Silver / Nickel plated)

H Hex (Silver / Nickel plated)

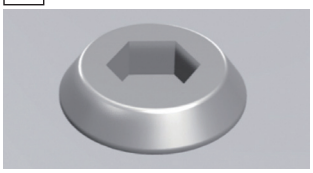

Hex wrench included.

2 Color

Please choose from the color combinations listed below.

S S

S B

Product Number

To determine a product number, fill H-W-D dimensions and select Screw and Color code in the following blank boxes.

AUPR □ - □ - □ □ - □ □

H-W-D dimensions	Screw	Color
See below for dimensions / product no.	(P or H)	(SS • SB)

Numbering example : If looking at "H88 x W430 x D250mm, Screw type H, Color type SB"

➡ AUPR 88-43-25 H-SB

Product no. / Details

■ Please suffix screw and color code at the end of the product number.

Product no.	H	W	D	Weight (kg)
AUPR 88-43-16□-□□	88	430	160	2.1
AUPR 88-43-20□-□□	88	430	200	2.3
AUPR 88-43-25□-□□	88	430	250	2.6
AUPR 88-43-30□-□□	88	430	300	2.9
AUPR 88-43-36□-□□	88	430	360	3.3
AUPR 88-43-43□-□□	88	430	430	3.7
AUPR 88-43-50□-□□	88	430	500	4.2
AUPR133-43-16□-□□	132.5	430	160	2.5
AUPR133-43-20□-□□	132.5	430	200	2.7
AUPR133-43-25□-□□	132.5	430	250	3.1
AUPR133-43-30□-□□	132.5	430	300	3.5
AUPR133-43-36□-□□	132.5	430	360	3.9
AUPR133-43-43□-□□	132.5	430	430	4.4
AUPR133-43-50□-□□	132.5	430	500	4.9
AUPR177-43-16□-□□	177	430	160	2.8
AUPR177-43-20□-□□	177	430	200	3.1
AUPR177-43-25□-□□	177	430	250	3.5
AUPR177-43-30□-□□	177	430	300	3.9
AUPR177-43-36□-□□	177	430	360	4.4
AUPR177-43-43□-□□	177	430	430	5.0
AUPR177-43-50□-□□	177	430	500	5.5
AUPR222-43-16□-□□	221.5	431	161	3.2
AUPR222-43-20□-□□	221.5	431	201	3.6
AUPR222-43-25□-□□	221.5	431	251	4.0
AUPR222-43-30□-□□	221.5	431	301	4.4
AUPR222-43-36□-□□	221.5	431	361	4.9
AUPR222-43-43□-□□	221.5	431	431	5.6
AUPR222-43-50□-□□	221.5	431	501	6.2

AUPR dimensions

■ DXF/DWG/PDF/STP drawings available on our website.

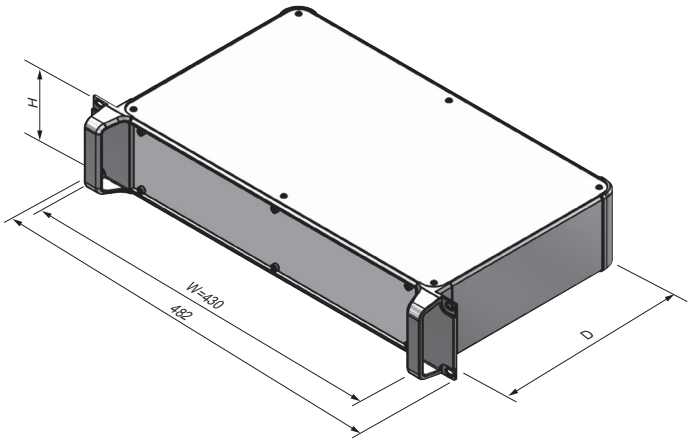

Accessories (Optional parts)

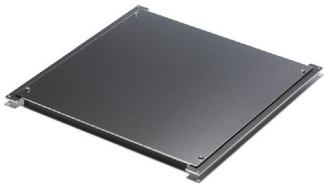

Mounting plate AUC series
See page 340

Rack mounting screw RT series
See website

Rack mounting screw RZ series
See website

AUPRE series EMC SHIELDED 19" ENCLOSURE WITH DETACHABLE PANELS

NEW

EMC Shielding

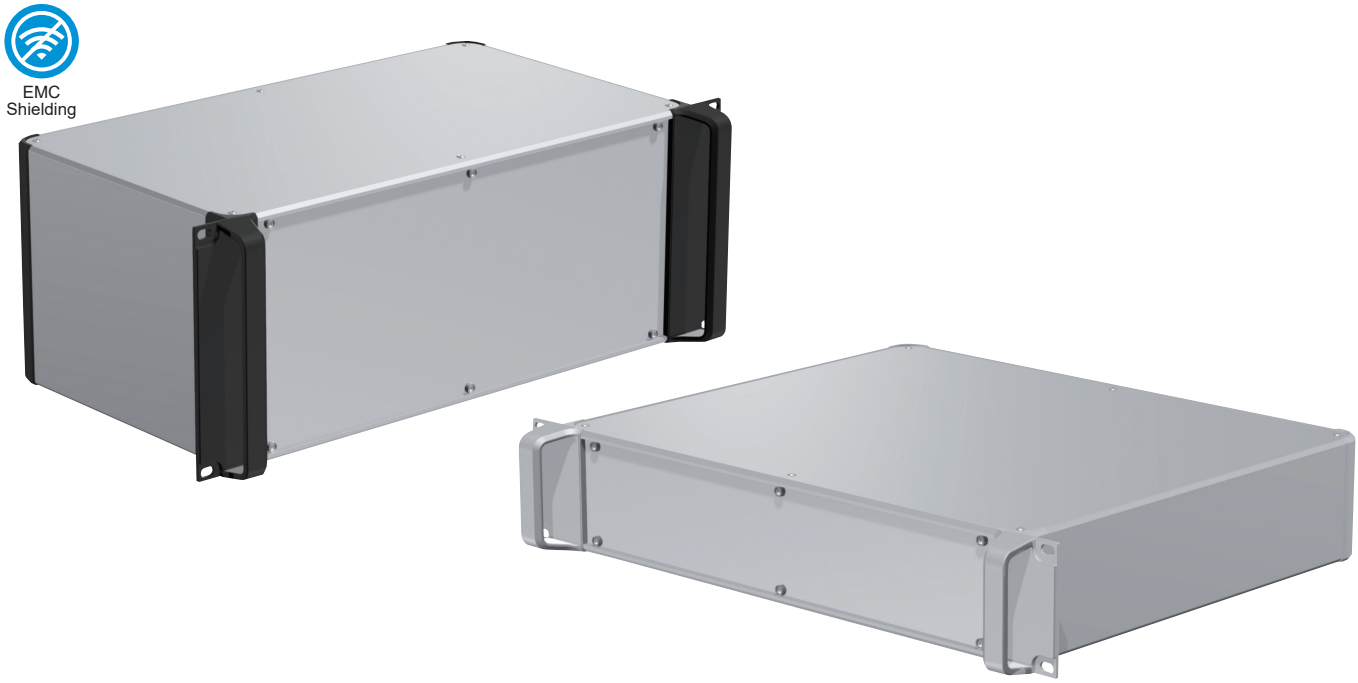

- EMC shielded 19" enclosure with handles.
- Detachable front / rear panels and Captive screws allow for easy maintenance as there is little risk of the screws dropping out and getting lost.
- A large selection of 28 different sizes in 2 different colors to choose from.
- Suitable for use as audio / visual equipment, communication equipment, rack mount computers, measuring instruments and more.

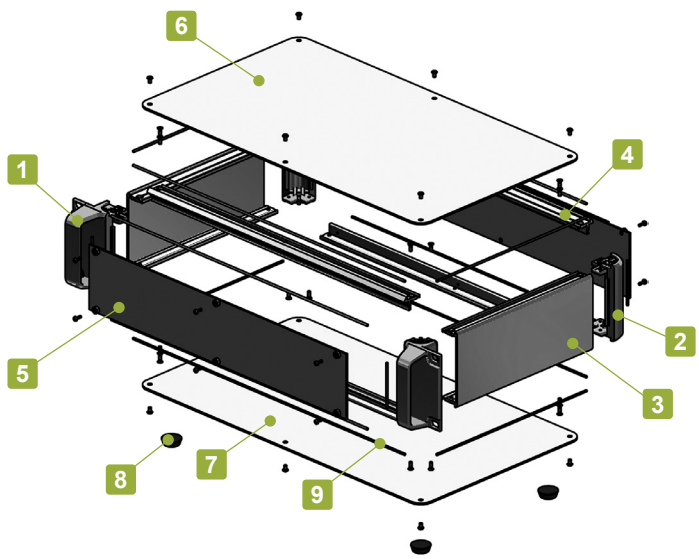

Included screws
- Top / Bottom cover
  M3-5 original trapezoid head & Nickel plated x 8~16 pcs
- Frame
  M3-8 flat head & Nickel plated x 16 pcs
- Panel
  M2.5-7 pan head & Nickel plated x 12 pcs

Recommended torque : { M2.5 : 0.15 ~ 0.2N • m / M3 / M4 : 0.3 ~ 0.6N • m

* Recommended torque listed is for reference only; actual may differ. Assemble after testing torque.

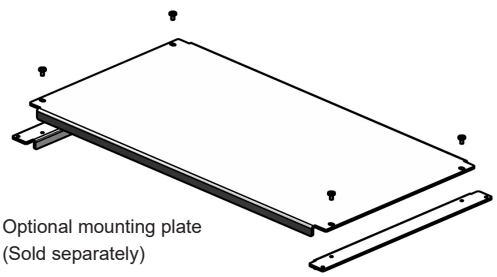

Optional mounting plate
(Sold separately)

Components

No.	Part name	Pcs	Material	Color / Finish
1	Handle corner block	2	Diecast aluminium ADC12	Silver • Black / Painted (Unfinished inside)
2	Corner block	2	Diecast aluminium ADC12	Silver • Black / Painted (Unfinished inside)
3	Frame	2	Extruded aluminium A6063S-T5	Silver / Painted (Unfinished inside)
4	Panel support frame	4	Extruded aluminium A6063S-T5	Silver / Painted (Unfinished inside)
5	Panel	2	Aluminium A1100P	Silver / Painted (Conductive inside)
6	Top cover	1	Aluminium A1100P	Silver / Painted (Conductive inside)
7	Bottom cover	1	Aluminium A1100P	Silver / Painted (Conductive inside)
8	Rubber feet	4	Synthetic rubber	Black
9	EMC shielding gasket	16	Conductive fiber UL94V-0	Metallic gray

To select Screw and Color, follow steps 1 ~ 2 below to determine product number.

1 Screw

P Plus (Silver / Nickel plated)

H Hex (Silver / Nickel plated)

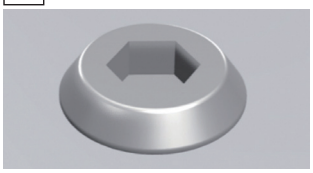

Hex wrench included.

2 Color

Please choose from the color combinations listed below.

S S

S B

Product Number

To determine a product number, fill H-W-D dimensions and select Screw and Color code in the following blank boxes.

AUPRE □ - □ - □ □ - □ □

H-W-D dimensions	Screw	Color
See below for dimensions / product no.	(P or H)	(SS • SB)

Numbering example : If looking at "H88 x W430 x D250mm, Screw type H, Color type SB"

➡ **AUPRE 88-43-25 H-SB**

Product no. / Details

■ Please suffix screw and color code at the end of the product number.

Product no.	H	W	D	Weight (kg)
AUPRE 88-43-16□-□□	88	430	160	2.1
AUPRE 88-43-20□-□□	88	430	200	2.3
AUPRE 88-43-25□-□□	88	430	250	2.6
AUPRE 88-43-30□-□□	88	430	300	2.9
AUPRE 88-43-36□-□□	88	430	360	3.3
AUPRE 88-43-43□-□□	88	430	430	3.7
AUPRE 88-43-50□-□□	88	430	500	4.2
AUPRE133-43-16□-□□	132.5	430	160	2.5
AUPRE133-43-20□-□□	132.5	430	200	2.8
AUPRE133-43-25□-□□	132.5	430	250	3.1
AUPRE133-43-30□-□□	132.5	430	300	3.5
AUPRE133-43-36□-□□	132.5	430	360	3.9
AUPRE133-43-43□-□□	132.5	430	430	4.4
AUPRE133-43-50□-□□	132.5	430	500	4.9
AUPRE177-43-16□-□□	177	430	160	2.8
AUPRE177-43-20□-□□	177	430	200	3.1
AUPRE177-43-25□-□□	177	430	250	3.5
AUPRE177-43-30□-□□	177	430	300	3.9
AUPRE177-43-36□-□□	177	430	360	4.4
AUPRE177-43-43□-□□	177	430	430	5.0
AUPRE177-43-50□-□□	177	430	500	5.5
AUPRE222-43-16□-□□	221.5	431	161	3.2
AUPRE222-43-20□-□□	221.5	431	201	3.6
AUPRE222-43-25□-□□	221.5	431	251	4.0
AUPRE222-43-30□-□□	221.5	431	301	4.4
AUPRE222-43-36□-□□	221.5	431	361	5.0
AUPRE222-43-43□-□□	221.5	431	431	5.6
AUPRE222-43-50□-□□	221.5	431	501	6.2

AUPRE dimensions

■ DXF/DWG/PDF/STP drawings available on our website.

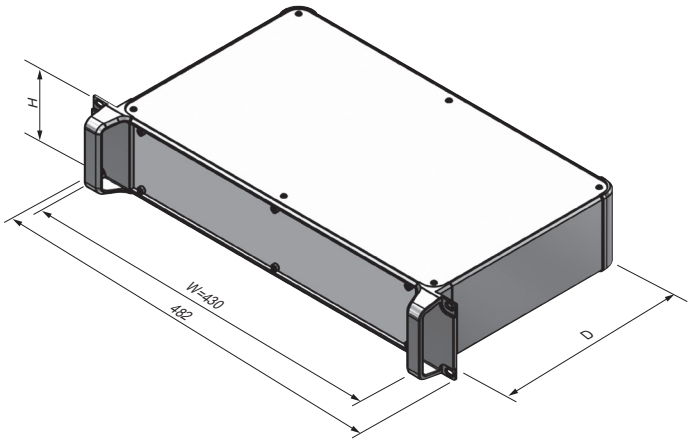

Accessories (Optional parts)

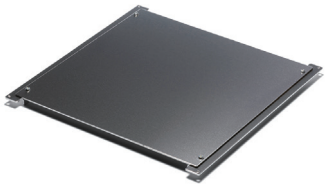

Mounting plate AUC series
See page 340

Rack mounting screw RT series
See website

Rack mounting screw RZ series
See website

AUXR series 19” RACK MOUNT ENCLOSURE

NEW

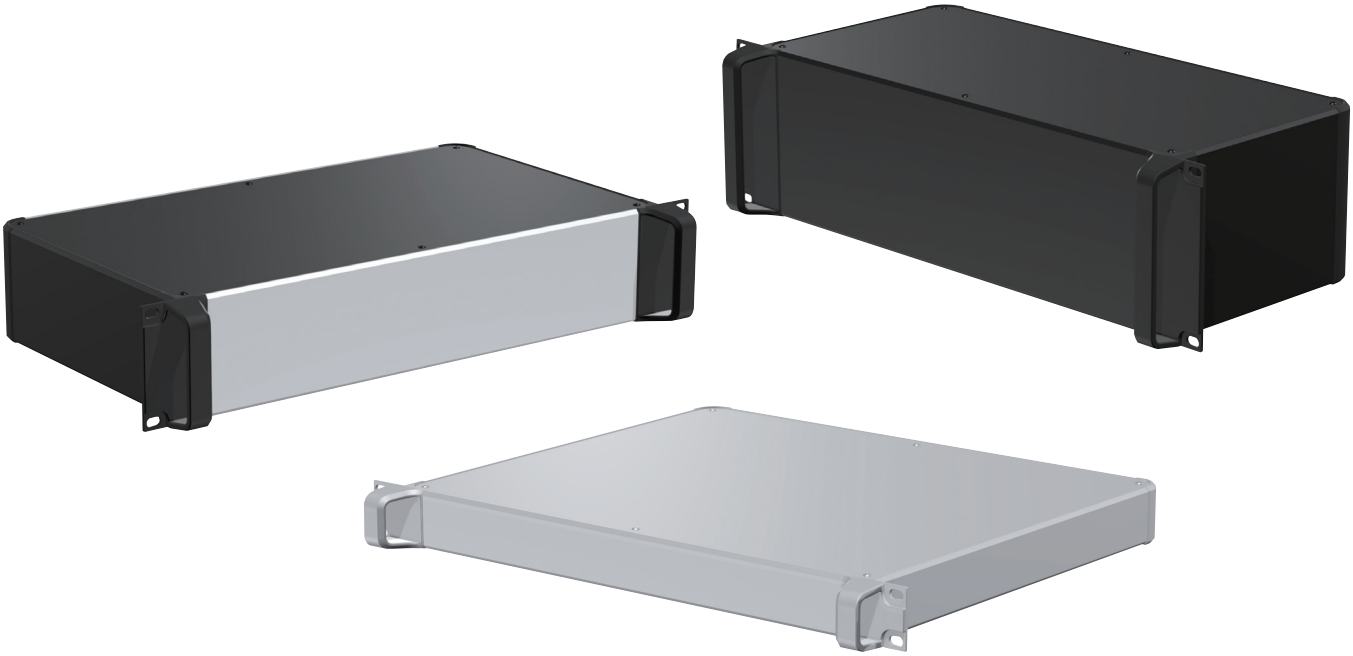

- 19” Rack Mount Enclosure with 4 extruded aluminium frames.
- Flat and rugged design rack mounting aluminium case with handles.
- A wide selection of 35 different sizes in 4 different colors to choose from.
- Suitable for use as audio / visual equipment, communication equipment, rack mount computers, measuring instruments and more.

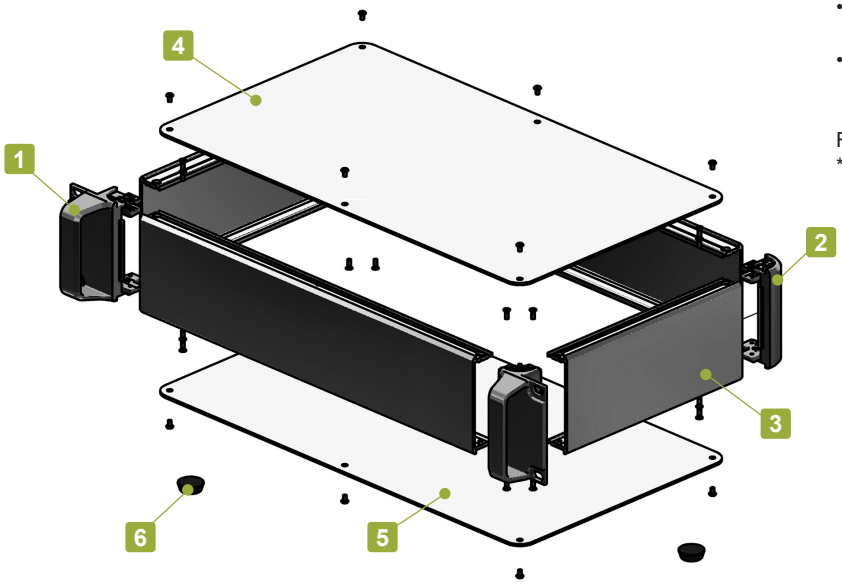

Included screws
- Top / Bottom cover
  M3-5 original trapezoid head & Nickel plated x 8~16 pcs
- Frame
  M3-8 flat head & Nickel plated x 16 pcs

Recommended torque : 0.3 ~ 0.6N • m
* Recommended torque listed is for reference only; actual may differ. Assemble after testing torque.

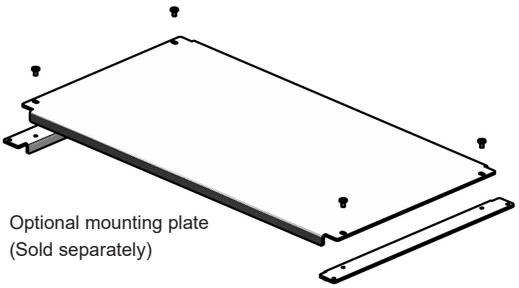

Optional mounting plate
(Sold separately)

Components

No.	Part name	Pcs	Material	Color / Finish
1	Handle corner block	2	Diecast aluminium ADC12	Silver • Black / Painted (Unfinished inside)
2	Corner block	2	Diecast aluminium ADC12	Silver • Black / Painted (Unfinished inside)
3	Frame	4	Extruded aluminium A6063S-T5	Silver • Black / Anodized
4	Top cover	1	Aluminium A1100P	Silver • Black / Anodized
5	Bottom cover	1	Aluminium A1100P	Silver • Black / Anodized
6	Rubber feet	4	Synthetic rubber	Black

To select Screw and Color, follow steps 1 ~ 2 below to determine product number.

1 Screw

P Plus (Silver / Nickel plated) (Black / Black trivalent chromate)

H Hex (Silver / Nickel plated) (Black / Black trivalent chromate)

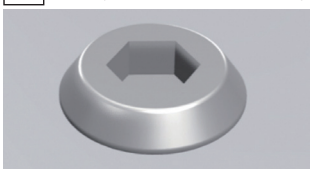

Hex wrench included.

*Color of screw will be the same as top • bottom cover color.

2 Color

Please choose from the color combinations listed below.

S S

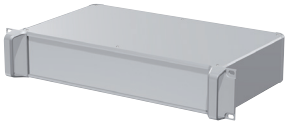

S B

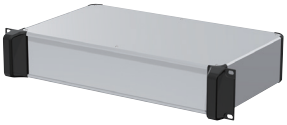

B S

B B

Product Number

To determine a product number, fill H-W-D dimensions and select Screw and Color code in the following blank boxes.

AUXR □ - □ - □ □ - □ □

H-W-D dimensions	Screw	Color
See below for dimensions / product no.	(P or H)	(SS • SB • BS • BB)

Numbering example : If looking at "H88 x W430 x D250mm, Screw type H, Color type BS"

➡ AUXR 88-43-25 H-BS

Product no. / Details

■ Please suffix screw and color code at the end of the product number.

Product no.	H	W	D	Weight (kg)
AUXR 44-43-16□-□□	44	430	160	1.6
AUXR 44-43-20□-□□	44	430	200	1.8
AUXR 44-43-25□-□□	44	430	250	2.1
AUXR 44-43-30□-□□	44	430	300	2.4
AUXR 44-43-36□-□□	44	430	360	2.7
AUXR 44-43-43□-□□	44	430	430	3.1
AUXR 44-43-50□-□□	44	430	500	3.5
AUXR 88-43-16□-□□	88	430	160	2.0
AUXR 88-43-20□-□□	88	430	200	2.3
AUXR 88-43-25□-□□	88	430	250	2.6
AUXR 88-43-30□-□□	88	430	300	2.9
AUXR 88-43-36□-□□	88	430	360	3.3
AUXR 88-43-43□-□□	88	430	430	3.7
AUXR 88-43-50□-□□	88	430	500	4.2
AUXR133-43-16□-□□	132.5	430	160	2.6
AUXR133-43-20□-□□	132.5	430	200	2.9
AUXR133-43-25□-□□	132.5	430	250	3.2
AUXR133-43-30□-□□	132.5	430	300	3.6
AUXR133-43-36□-□□	132.5	430	360	4.0
AUXR133-43-43□-□□	132.5	430	430	4.6
AUXR133-43-50□-□□	132.5	430	500	5.1
AUXR177-43-16□-□□	177	430	160	3.0
AUXR177-43-20□-□□	177	430	200	3.4
AUXR177-43-25□-□□	177	430	250	3.8
AUXR177-43-30□-□□	177	430	300	4.2
AUXR177-43-36□-□□	177	430	360	4.6
AUXR177-43-43□-□□	177	430	430	5.2
AUXR177-43-50□-□□	177	430	500	5.7

Product no.	H	W	D	Weight (kg)
AUXR222-43-16□-□□	221.5	431	161	3.5
AUXR222-43-20□-□□	221.5	431	201	3.9
AUXR222-43-25□-□□	221.5	431	251	4.3
AUXR222-43-30□-□□	221.5	431	301	4.7
AUXR222-43-36□-□□	221.5	431	361	5.3
AUXR222-43-43□-□□	221.5	431	431	5.9
AUXR222-43-50□-□□	221.5	431	501	6.5

AUXR dimensions

■ DXF/DWG/PDF/STP drawings available on our website.

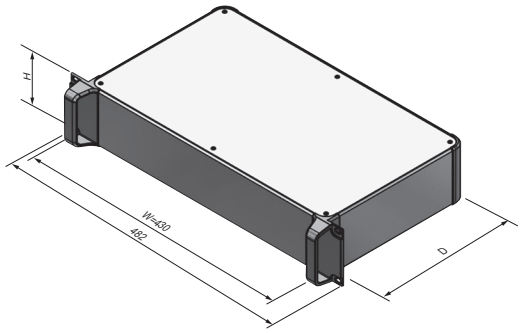

Accessories (Optional parts)

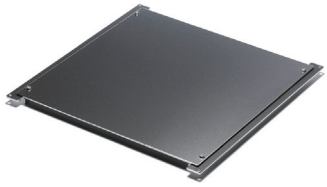

Mounting plate AUC series
See page 340

Rack mounting screw RT series
See website

Rack mounting screw RZ series
See website

AUXRE series EMC SHIELDED 19” RACK MOUNT ENCLOSURE

NEW

EMC Shielding

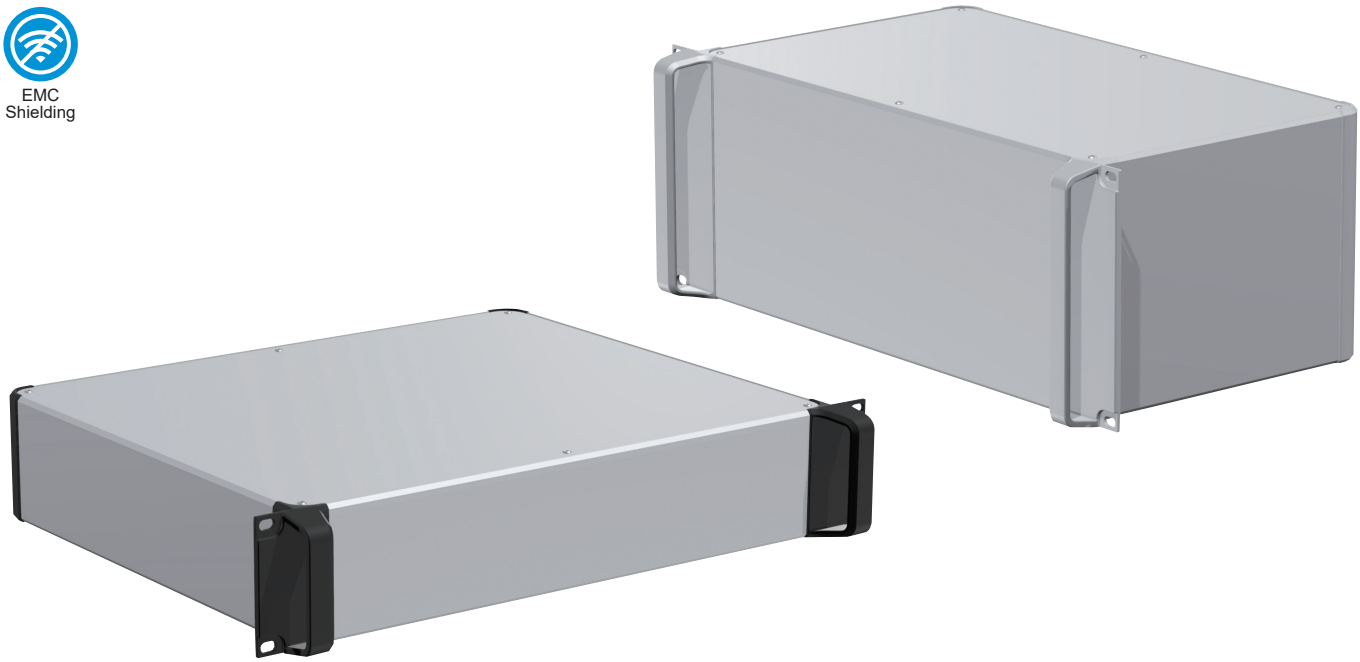

- EMC shielded 19” Rack Mount Enclosure with 4 extruded aluminium frames.
- Flat and rugged design rack mounting aluminium case with handles.
- A large selection of 35 different sizes in 2 different colors to choose from.
- Suitable for use as audio / visual equipment, communication equipment, rack mount computers, measuring instruments and more.

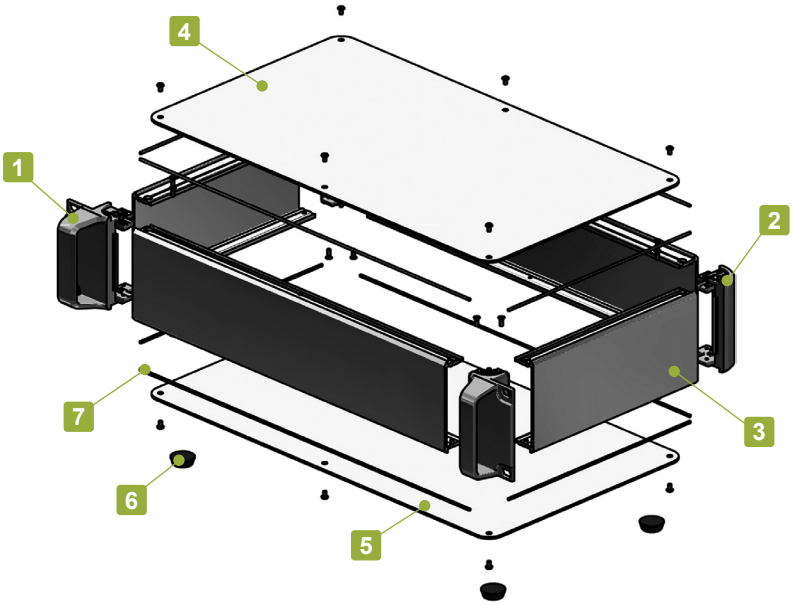

Included screws
- Top / Bottom cover
  M3-5 original trapezoid head & Nickel plated x 8~16 pcs
- Frame
  M3-8 flat head & Nickel plated x 16 pcs

Recommended torque : 0.3 ~ 0.6N • m
* Recommended torque listed is for reference only; actual may differ. Assemble after testing torque.

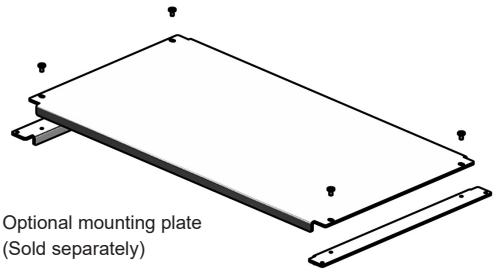

Optional mounting plate
(Sold separately)

Components

No.	Part name	Pcs	Material	Color / Finish
1	Handle corner block	2	Diecast aluminium ADC12	Silver • Black / Painted (Unfinished inside)
2	Corner block	2	Diecast aluminium ADC12	Silver • Black / Painted (Unfinished inside)
3	Frame	4	Extruded aluminium A6063S-T5	Silver / Painted (Unfinished inside)
4	Top cover	1	Aluminium A1100P	Silver / Painted (Conductive inside)
5	Bottom cover	1	Aluminium A1100P	Silver / Painted (Conductive inside)
6	Rubber feet	4	Synthetic rubber	Black
7	EMC shielding gasket	8	Conductive fiber UL94V-0	Metallic gray

To select Screw and Color, follow steps 1 ~ 2 below to determine product number.

1 Screw

P Plus (Silver / Nickel plated)

H Hex (Silver / Nickel plated)

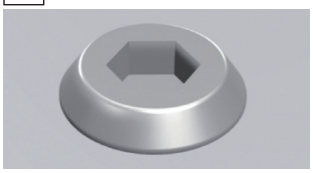

Hex wrench included.

2 Color

Please choose from the color combinations listed below.

S S

S B

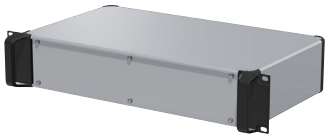

Product Number To determine a product number, fill H-W-D dimensions and select Screw and Color code in the following blank boxes.

AUXRE □ - □ - □ □ - □ □

H-W-D dimensions	Screw	Color
See below for dimensions / product no.	(P or H)	(SS • SB)

Numbering example : If looking at "H88 x W430 x D250mm, Screw type H, Color type SB"

➡ **AUXRE 88-43-25 H-SB**

Product no. / Details

■ Please suffix screw and color code at the end of the product number.

Product no.	H	W	D	Weight (kg)
AUXRE 44-43-16□-□□	44	430	160	2.0
AUXRE 44-43-20□-□□	44	430	200	2.3
AUXRE 44-43-25□-□□	44	430	250	2.6
AUXRE 44-43-30□-□□	44	430	300	2.9
AUXRE 44-43-36□-□□	44	430	360	3.3
AUXRE 44-43-43□-□□	44	430	430	3.7
AUXRE 44-43-50□-□□	44	430	500	4.2
AUXRE 88-43-16□-□□	88	430	160	2.0
AUXRE 88-43-20□-□□	88	430	200	2.3
AUXRE 88-43-25□-□□	88	430	250	2.6
AUXRE 88-43-30□-□□	88	430	300	2.9
AUXRE 88-43-36□-□□	88	430	360	3.3
AUXRE 88-43-43□-□□	88	430	430	3.7
AUXRE 88-43-50□-□□	88	430	500	4.2
AUXRE133-43-16□-□□	132.5	430	160	2.6
AUXRE133-43-20□-□□	132.5	430	200	2.9
AUXRE133-43-25□-□□	132.5	430	250	3.3
AUXRE133-43-30□-□□	132.5	430	300	3.6
AUXRE133-43-36□-□□	132.5	430	360	4.1
AUXRE133-43-43□-□□	132.5	430	430	4.6
AUXRE133-43-50□-□□	132.5	430	500	5.1
AUXRE177-43-16□-□□	177	430	160	3.0
AUXRE177-43-20□-□□	177	430	200	3.4
AUXRE177-43-25□-□□	177	430	250	3.8
AUXRE177-43-30□-□□	177	430	300	4.2
AUXRE177-43-36□-□□	177	430	360	4.6
AUXRE177-43-43□-□□	177	430	430	5.2
AUXRE177-43-50□-□□	177	430	500	5.8
AUXRE222-43-16□-□□	221.5	431	161	3.5
AUXRE222-43-20□-□□	221.5	431	201	3.9
AUXRE222-43-25□-□□	221.5	431	251	4.3
AUXRE222-43-30□-□□	221.5	431	301	4.7
AUXRE222-43-36□-□□	221.5	431	361	5.3
AUXRE222-43-43□-□□	221.5	431	431	5.9
AUXRE222-43-50□-□□	221.5	431	501	6.5

AUXRE dimensions

■ DXF/DWG/PDF/STP drawings available on our website.

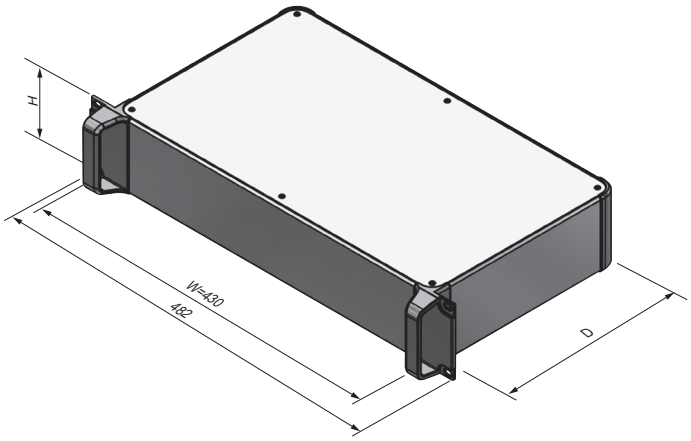

Accessories (Optional parts)

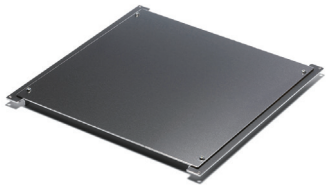

Mounting plate AUC series
See page 340

Rack mounting screw RT series
See website

Rack mounting screw RZ series
See website

AUC series MOUNTING PLATE for AUH

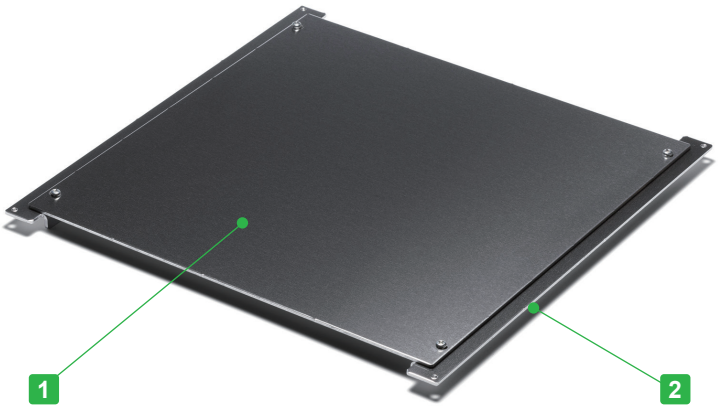

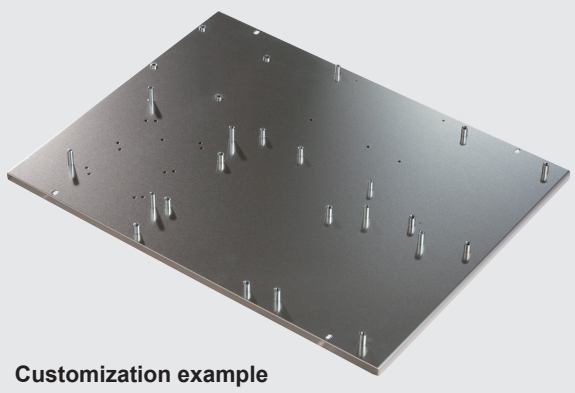

■ See page Custom-6 and our website for further details.

■ Mounting plate for AUH series.

Components

No.	Part name	Pcs	Material	Finish
1	Mounting plate	1	Aluminium A1050P t=2.0	Unfinished
2	L-bracket	2	Aluminium A1050P t=2.0	Unfinished

Included screw :
- Corner block — M3 flat head : Nickel plated x 4
- Mounting plate — M3-5 pan head : Trivalent chromate x 4

AUC dimensions

■ DXF/DWG/PDF/STP drawings available on our website.

Non-reinforced (N) type

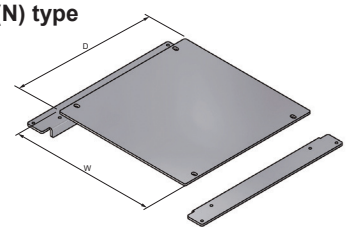

Reinforced (Y) type

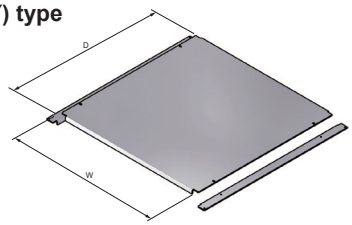

Product no. / Details

Product no.	W	D	Enclosure H-W-D	Reinforcement	Weight (g)
AUC16-20	108	148	H-16-20	N	138
AUC16-25	108	198	H-16-25	N	181
AUC16-30	108	248	H-16-30	N	226
AUC20-20	148	148	H-20-20	N	170
AUC20-25	148	198	H-20-25	N	224
AUC20-30	148	248	H-20-30	N	279
AUC20-36	148	308	H-20-36	N	345
AUC25-25	198	198	H-25-25	N	278
AUC25-30	198	248	H-25-30	N	346
AUC25-36	198	308	H-25-36	N	428
AUC25-43	198	378	H-25-43	N	524
AUC30-20	248	148	H-30-20	N	249
AUC30-25	248	198	H-30-25	N	331
AUC30-30	248	248	H-30-30	N	413

Product no.	W	D	Enclosure H-W-D	Reinforcement	Weight (g)
AUC30-36	248	308	H-30-36	N	512
AUC30-43	248	378	H-30-43	N	626
AUC30-50	248	448	H-30-50	N	741
AUC36-25	308	198	H-36-25	N	395
AUC36-30	308	248	H-36-30	N	494
AUC36-36	308	308	H-36-36	N	581
AUC36-43	308	378	H-36-43	N	749
AUC36-50	308	448	H-36-50	N	886
AUC43-30	378	248	H-43-30	Y	587
AUC43-36	378	308	H-43-36	Y	728
AUC43-43	378	378	H-43-43	Y	918
AUC43-50	378	448	H-43-50	Y	1,082
AUC60-36	548	308	H-60-36	Y	1,021
AUC60-43	548	378	H-60-43	Y	1,279

How to install AUC mounting plate

1. Install L-bracket onto countersunk screw hole on corner block.

2. Install mounting plate onto L-bracket with screws.

RT•RZ series RACK MOUNTING SCREW

RT

■ Easy installation by built-in washer.

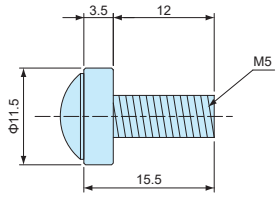

Product no. / Details

Product no.	Material	Finish	Pack of
RT-5S	Steel	Nickel plated	20
RT-5B	Steel	Black trivalent chromate	20

RZ

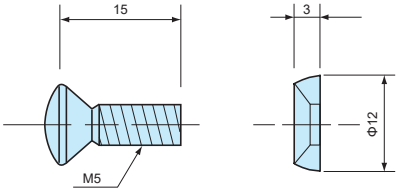

Product no. / Details

1 Round countersunk screw + 2 Decorative washer

Product no.	Material	Color / Finish	Pack of
RZ-5S	Brass	Silver / Nickel plated	20
RZ-5B	Steel screw	Black / Trivalent chromate	20
	Brass washer	Semi-gloss black / Painted	

RW series RACK MOUNTING SCREW with NYLON WASHER

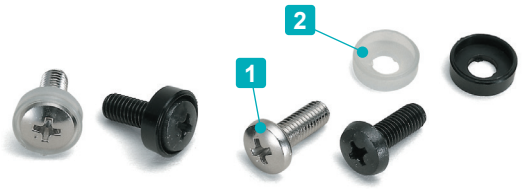

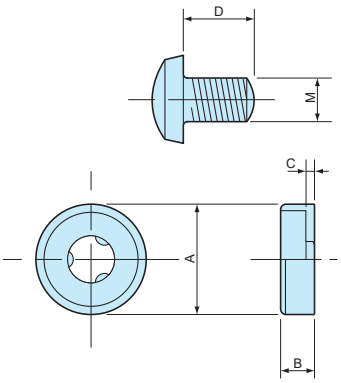

■ Nylon washer can protect panel surface when mounting and give anti-loosening effect.

■ Black color washer give aesthetical look on panel surface.

■ Natural color washer could be faded under long time use.

Components

No.	Part name	Material	Color / Finish
1	Bind screw	Steel	Nickel plated • Black trivalent chromate
2	Nylon washer	Nylon	Black • Natural

Product no. / Details

Product no.	A	B	C	D	M	Screw	Washer	Pack of
RW-3B	7.8	2.5	1.0	6	3	Black trivalent chromate	Black	20
RW-4B	9.8	3.3	1.1	8	4	Black trivalent chromate	Black	20
RW-5B	12	4.0	1.3	14	5	Black trivalent chromate	Black	20
RW-5S	12	4.0	1.3	14	5	Nickel plated	Natural	20