AU series

NEXT GENERATION Aluminium Case

The perfect unity of flexibility, versatility, and appearance!

4 Distinct Models for Different Applications

Standard Model AU series

Standard model with front/rear sheet aluminium panels.

See page 151 ~ 154

Detachable Panel Model AUP series

Easy maintenance with detachable front/rear panels.
An EMC shielded AUPE series is also available.

See page 155 ~ 162

Control Box Model AUX series

Structure of extruded aluminium frames on 4 sides.

Suitable for control box use.

EMC shielded AUXE series is also available.

See page 163 ~ 170

Corner Guard Model AUG series

TPE Corner guard model.
An EMC shielded AUGE series is also available.

See page 171 ~ 178

Providing versatile and flexible enclosing solutions

The aluminium case AU series has an assembly-type structure which allows it to be easily customizable. Both versatile and flexible, it is designed to be used as various devices from the classic audio amplifiers to next-gen IoT devices.
Select from a huge line-up of 172 different sizes based on your application type and ideas.

Measuring Equipment

Fiber Optic Transmitter

IoT Gateway

Audio Amplifier

Command Panel

Industrial Embedded PC

Power Supply

AUGE series EMC SHIELDED ALUMINIUM ENCLOSURE with CORNER GUARD

NEW SIZE

EMC Shielding Effects

- Shielding gasket allows the enclosure to be EMC shielded.
- Rugged design EMC shielded aluminium enclosure with TPE (Elastomer) corner guards.
  Corner guards also act as non-slip rubber feet.
- Suitable to be used as an easy maintenance desktop case due to its detachable front/rear panels.
  Captive screws allow for ease of maintenance as there is little risk of the screws dropping out and getting lost.
- A large selection of 129 different sizes to choose from.
- A total of 4 selectable color combinations with a silver anodized body and 4 corner guard colors - Black, Gray, Navy and Red.

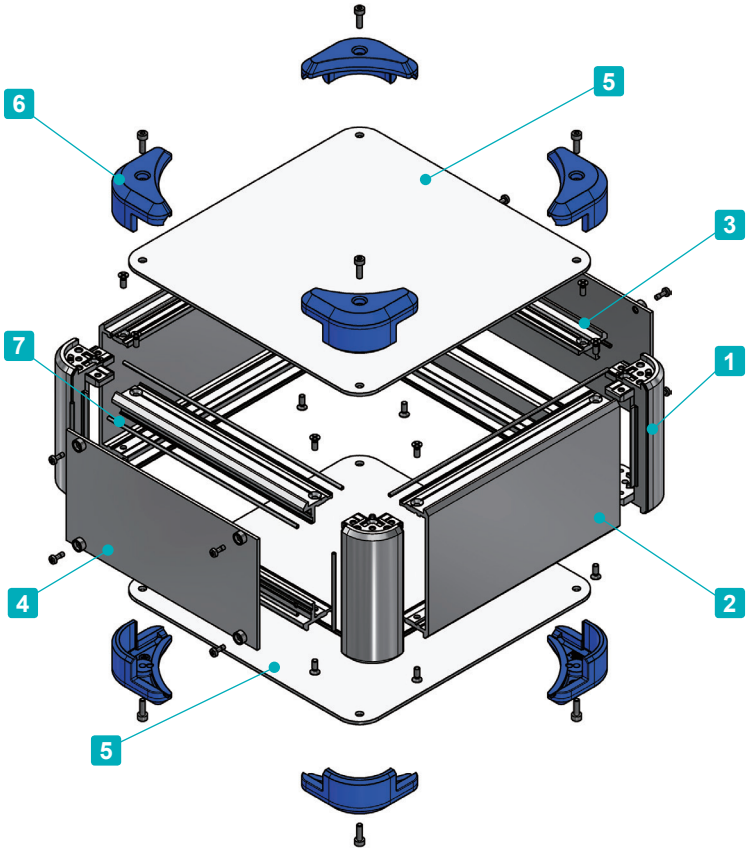

Included screws :

- Top / Bottom cover (not applicable to some models)
  M3-5 original trapezoid head (hex) & Nickel plated x 4~8 pcs
- Frame / Panel support frame
  M3-8 flat head & Nickel plated x 16 pcs
- Corner guard
  M3-10 hex & Black trivalent chromate x 8 pcs
  * Hex wrench included.
- Panel
  Captive M2.5-7 pan head & Nickel plated x 8~12 pcs

Recommended torque :
- M3 -10 hex - 0.2N • m
- M2.5-7 pan head - 0.15 ~ 0.2N • m
- Other screws - 0.3 ~ 0.6N • m

* Recommended torque listed is for reference only; actual may differ. Assemble after testing torque.

Components

No.	Part name	Pcs	Material	Color / Finish
1	Corner block	4	Diecast aluminium ADC12	Silver / Painted (Unfinished inside)
2	Frame	2	Extruded aluminium A6063S-T5	Silver / Painted (Unfinished inside)
3	Panel support frame	4	Extruded aluminium A6063S-T5	Silver / Painted (Unfinished inside)
4	Panel	2	Aluminium A1100P	Silver / Painted (Conductive inside)
5	Top • bottom cover	2	Aluminium A1100P	Silver / Painted (Conductive inside)
6	Corner guard	8	TPE (Elastomer)	Black • Gray • Navy • Red
7	EMC shielding gasket	16	Conductive fiber UL94V-0	Metallic gray

AUGE dimensions

■ DXF/DWG/PDF/STP drawings available on our website.

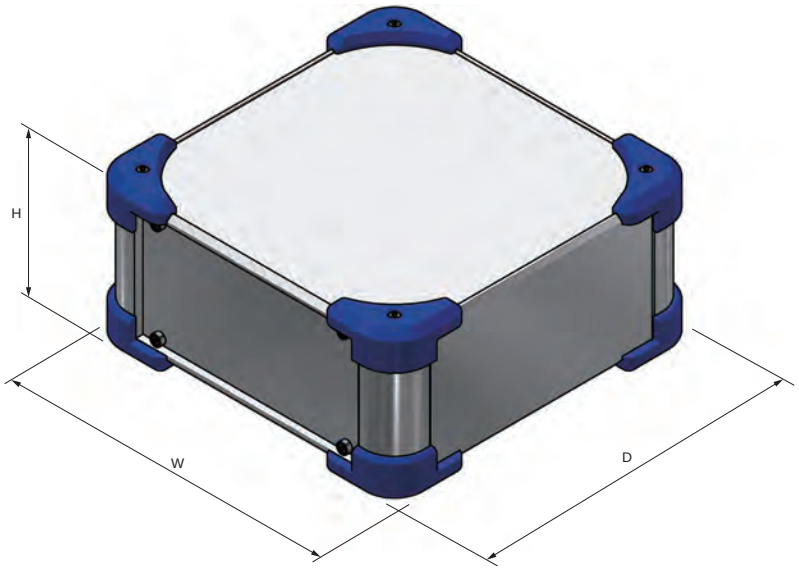

■ Install the EMC shielding gasket into the grooves on the frame, panel support frame, and corner block.

Frame

Panel support frame

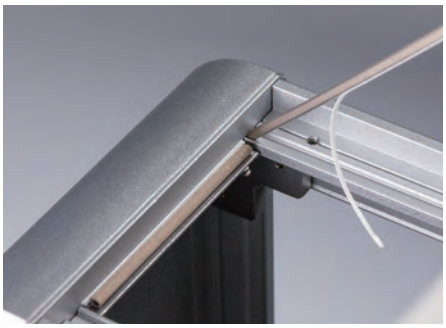

Corner block

Accessories (Optional parts)

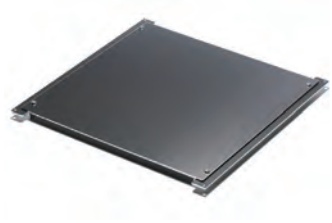

Mounting plate AUC series
See page 179 ~ 180

Elastomer carrying handle FM200
See website

Tilt leg TLW series
See page 222

EMC shielding fan filter EMF series
See website

Color Type

Please choose from the color combinations listed below.

S B (Silver / Black)

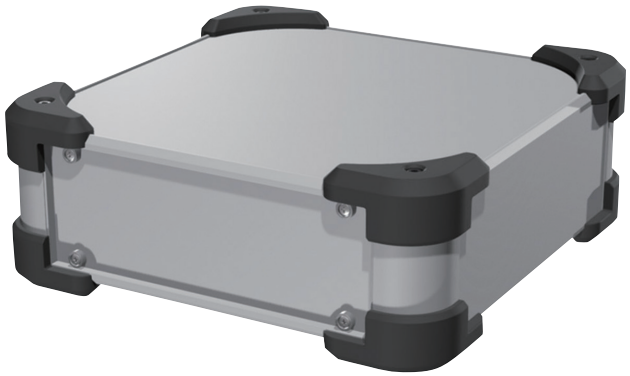

S G (Silver / Gray)

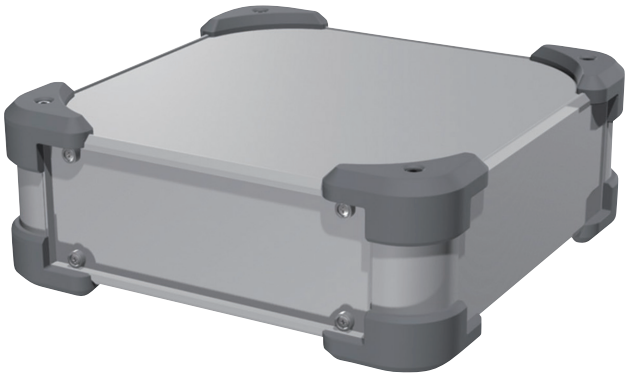

S N (Silver / Navy)

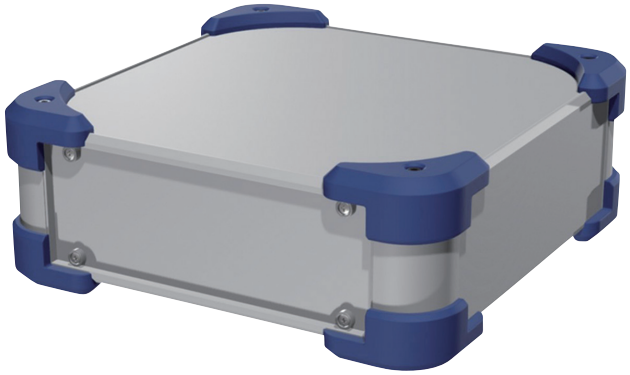

S R (Silver / Red)

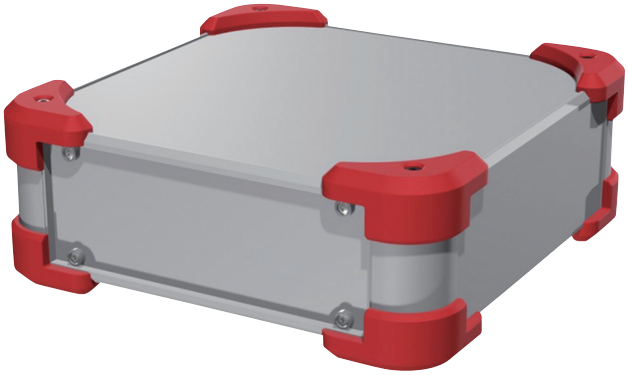

Product Number To determine a product number, please suffix Color code at the end of product number.

AUGE □ - □ - □ - □□

H-W-D dimensions
See page 178 for dimensions / product no.

Color
SB • SG • SN • SR

Numbering example :
If looking at "H144.5 x W438 x D308mm, Color type SN"

➡ **AUGE 133-43-30-SN**

Product no. / Details

■ Please suffix color type at the end of the product number.

Product no.	H	W	D	Weight (kg)
AUGE 66-16-16- □□	78	168	168	0.9
AUGE 66-16-20- □□	78	168	208	1.1
AUGE 66-16-25- □□	78	168	258	1.2
AUGE 66-16-30- □□	78	168	308	1.4
NEW AUGE 66-16-36- □□	78	168	368	1.6
NEW AUGE 66-16-43- □□	78	168	438	1.8
AUGE 66-20-16- □□	78	208	168	1.1
AUGE 66-20-20- □□	78	208	208	1.2
AUGE 66-20-25- □□	78	208	258	1.4
AUGE 66-20-30- □□	78	208	308	1.6
AUGE 66-20-36- □□	78	208	368	1.8
AUGE 66-20-43- □□	78	208	438	2.1
AUGE 66-25-16- □□	78	258	168	1.2
AUGE 66-25-20- □□	78	258	208	1.4
AUGE 66-25-25- □□	78	258	258	1.6
AUGE 66-25-30- □□	78	258	308	1.8
AUGE 66-25-36- □□	78	258	368	2.0
AUGE 66-25-43- □□	78	258	438	2.4
AUGE 66-30-16- □□	78	308	168	1.4
AUGE 66-30-20- □□	78	308	208	1.6
AUGE 66-30-25- □□	78	308	258	1.8
AUGE 66-30-30- □□	78	308	308	2.0
AUGE 66-30-36- □□	78	308	368	2.3
AUGE 66-30-43- □□	78	308	438	2.7
AUGE 66-30-50- □□	78	308	508	3
NEW AUGE 66-36-16- □□	78	368	168	1.6
AUGE 66-36-20- □□	78	368	208	1.8
AUGE 66-36-25- □□	78	368	258	2.1
AUGE 66-36-30- □□	78	368	308	2.3
AUGE 66-36-36- □□	78	368	368	2.6
AUGE 66-36-43- □□	78	368	438	3
AUGE 66-36-50- □□	78	368	508	3.4
NEW AUGE 66-43-16- □□	78	438	168	1.8
AUGE 66-43-20- □□	78	438	208	2.1
AUGE 66-43-25- □□	78	438	258	2.4
AUGE 66-43-30- □□	78	438	308	2.7
AUGE 66-43-36- □□	78	438	368	3.0
AUGE 66-43-43- □□	78	438	438	3.5
AUGE 66-43-50- □□	78	438	508	3.9
AUGE 66-50-30- □□	78	508	308	3.0
AUGE 66-50-36- □□	78	508	368	3.4
AUGE 66-50-43- □□	78	508	438	3.9
AUGE 66-50-50- □□	78	508	508	4.4
AUGE 88-16-16- □□	100	168	168	1.0
AUGE 88-16-20- □□	100	168	208	1.2
AUGE 88-16-25- □□	100	168	258	1.4
AUGE 88-16-30- □□	100	168	308	1.5
NEW AUGE 88-16-36- □□	100	168	368	1.8
NEW AUGE 88-16-43- □□	100	168	438	2.0
AUGE 88-20-16- □□	100	208	168	1.2
AUGE 88-20-20- □□	100	208	208	1.3
AUGE 88-20-25- □□	100	208	258	1.5
AUGE 88-20-30- □□	100	208	308	1.7
AUGE 88-20-36- □□	100	208	368	1.9
AUGE 88-20-43- □□	100	208	438	2.2
AUGE 88-25-16- □□	100	258	168	1.4
AUGE 88-25-20- □□	100	258	208	1.5
AUGE 88-25-25- □□	100	258	258	1.7
AUGE 88-25-30- □□	100	258	308	2.0
AUGE 88-25-36- □□	100	258	368	2.2
AUGE 88-25-43- □□	100	258	438	2.6
AUGE 88-30-16- □□	100	308	168	1.5
AUGE 88-30-20- □□	100	308	208	1.7
AUGE 88-30-25- □□	100	308	258	2.0
AUGE 88-30-30- □□	100	308	308	2.2

Product no.	H	W	D	Weight (kg)
AUGE 88-30-36- □□	100	308	368	2.5
AUGE 88-30-43- □□	100	308	438	2.9
AUGE 88-30-50- □□	100	308	508	3.2
NEW AUGE 88-36-16- □□	100	368	168	1.8
AUGE 88-36-20- □□	100	368	208	2.0
AUGE 88-36-25- □□	100	368	258	2.2
AUGE 88-36-30- □□	100	368	308	2.5
AUGE 88-36-36- □□	100	368	368	2.8
AUGE 88-36-43- □□	100	368	438	3.3
AUGE 88-36-50- □□	100	368	508	3.7
NEW AUGE 88-43-16- □□	100	438	168	1.9
AUGE 88-43-20- □□	100	438	208	2.3
AUGE 88-43-25- □□	100	438	258	2.6
AUGE 88-43-30- □□	100	438	308	2.9
AUGE 88-43-36- □□	100	438	368	3.3
AUGE 88-43-43- □□	100	438	438	3.7
AUGE 88-43-50- □□	100	438	508	4.2
AUGE 88-50-30- □□	100	508	308	3.2
AUGE 88-50-36- □□	100	508	368	3.7
AUGE 88-50-43- □□	100	508	438	4.2
AUGE 88-50-50- □□	100	508	508	4.7
AUGE133-16-16- □□	144.5	168	168	1.3
AUGE133-16-20- □□	144.5	168	208	1.5
AUGE133-16-25- □□	144.5	168	258	1.7
AUGE133-16-30- □□	144.5	168	308	1.9
NEW AUGE133-16-36- □□	144.5	168	368	2.2
NEW AUGE133-16-43- □□	144.5	168	438	2.4
AUGE133-20-16- □□	144.5	208	168	1.4
AUGE133-20-20- □□	144.5	208	208	1.6
AUGE133-20-25- □□	144.5	208	258	1.9
AUGE133-20-30- □□	144.5	208	308	2.1
AUGE133-20-36- □□	144.5	208	368	2.4
AUGE133-20-43- □□	144.5	208	438	2.8
AUGE133-25-16- □□	144.5	258	168	1.6
AUGE133-25-20- □□	144.5	258	208	1.9
AUGE133-25-25- □□	144.5	258	258	2.1
AUGE133-25-30- □□	144.5	258	308	2.4
AUGE133-25-36- □□	144.5	258	368	2.7
AUGE133-25-43- □□	144.5	258	438	3.1
AUGE133-30-16- □□	144.5	308	168	1.8
AUGE133-30-20- □□	144.5	308	208	2.1
AUGE133-30-25- □□	144.5	308	258	2.4
AUGE133-30-30- □□	144.5	308	308	2.7
AUGE133-30-36- □□	144.5	308	368	3.0
AUGE133-30-43- □□	144.5	308	438	3.4
AUGE133-30-50- □□	144.5	308	508	3.8
NEW AUGE133-36-16- □□	144.5	368	168	2.1
AUGE133-36-20- □□	144.5	368	208	2.3
AUGE133-36-25- □□	144.5	368	258	2.7
AUGE133-36-30- □□	144.5	368	308	3
AUGE133-36-36- □□	144.5	368	368	3.4
AUGE133-36-43- □□	144.5	368	438	3.9
AUGE133-36-50- □□	144.5	368	508	4.3
NEW AUGE133-43-16- □□	144.5	438	168	2.4
AUGE133-43-20- □□	144.5	438	208	2.7
AUGE133-43-25- □□	144.5	438	258	3
AUGE133-43-30- □□	144.5	438	308	3.4
AUGE133-43-36- □□	144.5	438	368	3.8
AUGE133-43-43- □□	144.5	438	438	4.3
AUGE133-43-50- □□	144.5	438	508	4.9
AUGE133-50-30- □□	144.5	508	308	3.8
AUGE133-50-36- □□	144.5	508	368	4.3
AUGE133-50-43- □□	144.5	508	438	4.8
AUGE133-50-50- □□	144.5	508	508	5.4

AUG series ALUMINIUM ENCLOSURE with CORNER GUARD

NEW SIZE

- Rugged design aluminium enclosure with TPE (Elastomer) corner guards. Corner guards also act as non-slip rubber feet.
- A large selection of 172 different sizes to choose from.
- A total of 8 selectable color combinations with 4 corner guard colors - Black, Gray, Navy and Red - and 2 enclosure colors - Silver and Black anodized.
- Versatile aluminium case suitable for use as measuring instrument, controller, industrial embedded computer, power supply, audio amplifier, and so on.

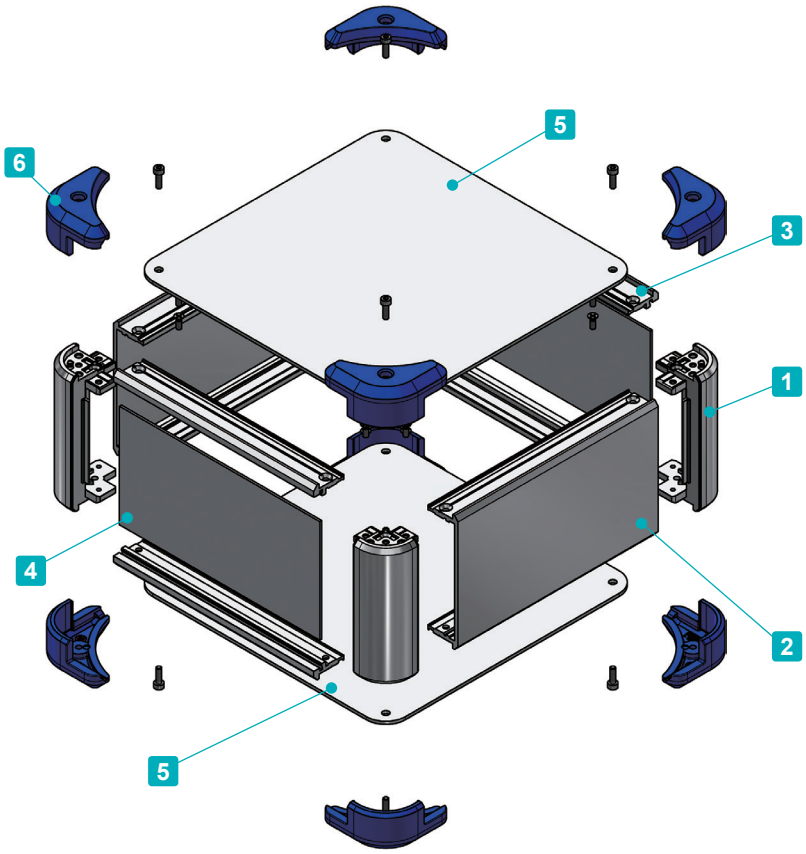

Included screws

- Top / Bottom cover (not applicable to some models)
  M3-5 original trapezoid head (hex) &
  Nickel plated / Black trivalent chromate x 4~8 pcs
- Frame / Panel support frame
  M3-8 flat head & Nickel plated x 16 pcs
- Corner guard
  M3-10 hex & Black trivalent chromate x 8 pcs
  * Hex wrench included.

Recommended torque : { M3 -10 hex - 0.2N • m
Other screws - 0.3 ~ 0.6N • m

* Recommended torque listed is for reference only; actual may differ. Assemble after testing torque.

Components

No.	Part name	Pcs	Material	Color / Finish
1	Corner block	4	Diecast aluminium ADC12	Silver • Black / Painted (Unfinished inside)
2	Frame	2	Extruded aluminium A6063S-T5	Silver • Black / Anodized
3	Panel support frame	4	Extruded aluminium A6063S-T5	Silver • Black / Anodized
4	Panel	2	Aluminium A1100P	Silver • Black / Anodized
5	Top • bottom cover	2	Aluminium A1100P	Silver • Black / Anodized
6	Corner guard	8	TPE (Elastomer)	Black • Gray • Navy • Red

AUG dimensions

■ DXF/DWG/PDF/STP drawings available on our website.

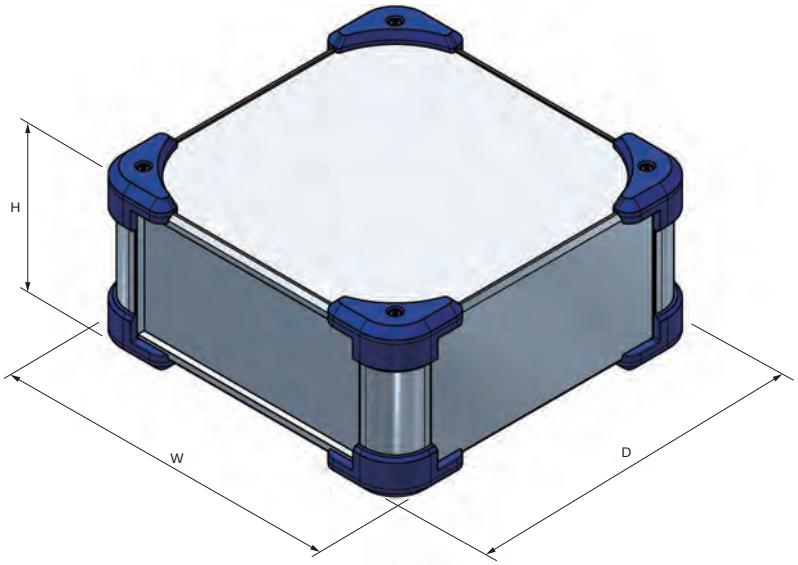

■ Mounting of a PCB or optional mounting plate is made easy through the use of the through-holes inside the aluminium diecast corner block.
See page 180 for how to install mounting plate.

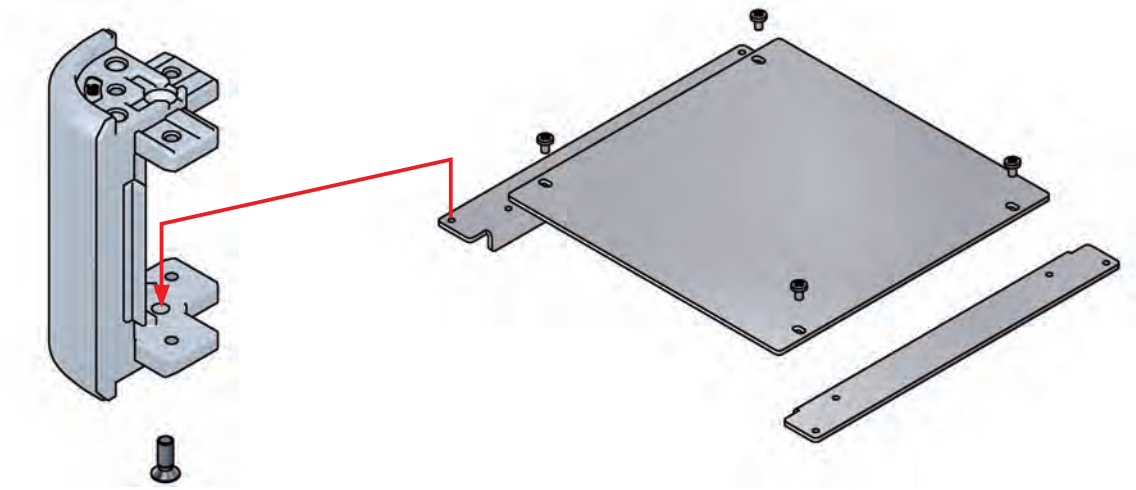

Accessories (Optional parts)

Mounting plate AUC series
See page 179 ~ 180

Elastomer carrying handle FM200
See website

Tilt leg TLW series
See page 222

Color Type

Please choose from the color combinations listed below.

S B (Silver / Black)

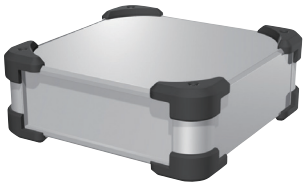

S G (Silver / Gray)

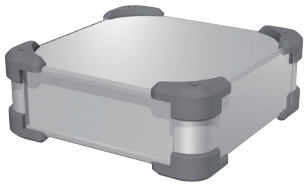

S N (Silver / Navy)

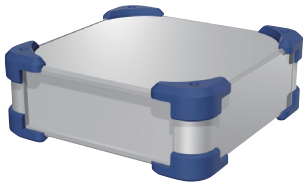

S R (Silver / Red)

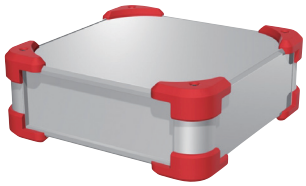

B B (Black / Black)

B G (Black / Gray)

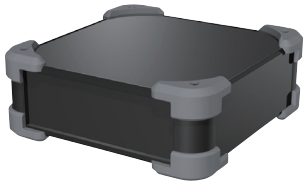

B N (Black / Navy)

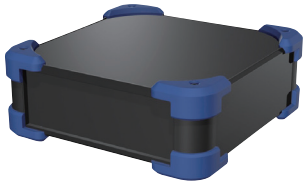

B R (Black / Red)

Product Number To determine a product number, please suffix Color type at the end of product number.

AUG □ - □ - □ - □□

H-W-D dimensions

See page 173-174 for dimensions and product no.

Color

SB • SG • SN • SR
BB • BG • BN • BR

Numbering example :
If looking at "H100 x W308 x D208mm, Color type BR"

➡ **AUG 88-30-20-BR**

Product no. / Details

■ Please suffix feet, screw, and color type at the end of the product number.

Product no.	H	W	D	Weight (kg)
NEW AUG 44-16-16- □□	56	168	168	0.7
NEW AUG 44-16-20- □□	56	168	208	0.8
NEW AUG 44-16-25- □□	56	168	258	1
NEW AUG 44-16-30- □□	56	168	308	1.1
NEW AUG 44-16-36- □□	56	168	368	1.3
NEW AUG 44-16-43- □□	56	168	438	1.5
NEW AUG 44-20-16- □□	56	208	168	0.8
NEW AUG 44-20-20- □□	56	208	208	1
NEW AUG 44-20-25- □□	56	208	258	1.1
NEW AUG 44-20-30- □□	56	208	308	1.3
NEW AUG 44-20-36- □□	56	208	368	1.5
NEW AUG 44-20-43- □□	56	208	438	1.7
NEW AUG 44-25-16- □□	56	258	168	1
NEW AUG 44-25-20- □□	56	258	208	1.1
NEW AUG 44-25-25- □□	56	258	258	1.3
NEW AUG 44-25-30- □□	56	258	308	1.5
NEW AUG 44-25-36- □□	56	258	368	1.7
NEW AUG 44-25-43- □□	56	258	438	2
NEW AUG 44-30-16- □□	56	308	168	1.1
NEW AUG 44-30-20- □□	56	308	208	1.3
NEW AUG 44-30-25- □□	56	308	258	1.5
NEW AUG 44-30-30- □□	56	308	308	1.7

Product no.	H	W	D	Weight (kg)
NEW AUG 44-30-36- □□	56	308	368	2
NEW AUG 44-30-43- □□	56	308	438	2.3
NEW AUG 44-30-50- □□	56	308	508	2.6
NEW AUG 44-36-16- □□	56	368	168	1.3
NEW AUG 44-36-20- □□	56	368	208	1.5
NEW AUG 44-36-25- □□	56	368	258	1.7
NEW AUG 44-36-30- □□	56	368	308	2
NEW AUG 44-36-36- □□	56	368	368	2.3
NEW AUG 44-36-43- □□	56	368	438	2.7
NEW AUG 44-36-50- □□	56	368	508	3
NEW AUG 44-43-16- □□	56	438	168	1.5
NEW AUG 44-43-20- □□	56	438	208	1.7
NEW AUG 44-43-25- □□	56	438	258	2
NEW AUG 44-43-30- □□	56	438	308	2.3
NEW AUG 44-43-36- □□	56	438	368	2.6
NEW AUG 44-43-43- □□	56	438	438	3
NEW AUG 44-43-50- □□	56	438	508	3.4
NEW AUG 44-50-30- □□	56	508	308	2.6
NEW AUG 44-50-36- □□	56	508	368	3
NEW AUG 44-50-43- □□	56	508	438	3.4
NEW AUG 44-50-50- □□	56	508	508	3.9

*Weight listed is calculated based on rubber feet selection.

Product no. / Details

■ Please suffix color type at the end of the product number.

Product no.	H	W	D	Weight (kg)
AUG 66-16-16- □□	78	168	168	0.9
AUG 66-16-20- □□	78	168	208	1.0
AUG 66-16-25- □□	78	168	258	1.2
AUG 66-16-30- □□	78	168	308	1.3
NEW AUG 66-16-36- □□	78	168	368	1.5
NEW AUG 66-16-43- □□	78	168	438	1.8
AUG 66-20-16- □□	78	208	168	1.0
AUG 66-20-20- □□	78	208	208	1.2
AUG 66-20-25- □□	78	208	258	1.3
AUG 66-20-30- □□	78	208	308	1.5
AUG 66-20-36- □□	78	208	368	1.7
AUG 66-20-43- □□	78	208	438	2.0
AUG 66-25-16- □□	78	258	168	1.2
AUG 66-25-20- □□	78	258	208	1.3
AUG 66-25-25- □□	78	258	258	1.5
AUG 66-25-30- □□	78	258	308	1.7
AUG 66-25-36- □□	78	258	368	2.0
AUG 66-25-43- □□	78	258	438	2.3
AUG 66-30-16- □□	78	308	168	1.3
AUG 66-30-20- □□	78	308	208	1.5
AUG 66-30-25- □□	78	308	258	1.7
AUG 66-30-30- □□	78	308	308	2.0
AUG 66-30-36- □□	78	308	368	2.2
AUG 66-30-43- □□	78	308	438	2.6
AUG 66-30-50- □□	78	308	508	2.9
NEW AUG 66-36-16- □□	78	368	168	1.5
AUG 66-36-20- □□	78	368	208	1.7
AUG 66-36-25- □□	78	368	258	2.0
AUG 66-36-30- □□	78	368	308	2.2
AUG 66-36-36- □□	78	368	368	2.5
AUG 66-36-43- □□	78	368	438	2.9
AUG 66-36-50- □□	78	368	508	3.3
NEW AUG 66-43-16- □□	78	438	168	1.7
AUG 66-43-20- □□	78	438	208	2.0
AUG 66-43-25- □□	78	438	258	2.3
AUG 66-43-30- □□	78	438	308	2.6
AUG 66-43-36- □□	78	438	368	2.9
AUG 66-43-43- □□	78	438	438	3.3
AUG 66-43-50- □□	78	438	508	3.8
AUG 66-50-30- □□	78	508	308	2.9
AUG 66-50-36- □□	78	508	368	3.3
AUG 66-50-43- □□	78	508	438	3.8
AUG 66-50-50- □□	78	508	508	4.2
AUG 88-16-16- □□	100	168	168	1.0
AUG 88-16-20- □□	100	168	208	1.1
AUG 88-16-25- □□	100	168	258	1.3
AUG 88-16-30- □□	100	168	308	1.5
NEW AUG 88-16-36- □□	100	168	368	1.7
NEW AUG 88-16-43- □□	100	168	438	1.9
AUG 88-20-16- □□	100	208	168	1.1
AUG 88-20-20- □□	100	208	208	1.3
AUG 88-20-25- □□	100	208	258	1.5
AUG 88-20-30- □□	100	208	308	1.7
AUG 88-20-36- □□	100	208	368	1.9
AUG 88-20-43- □□	100	208	438	2.2
AUG 88-25-16- □□	100	258	168	1.3
AUG 88-25-20- □□	100	258	208	1.5
AUG 88-25-25- □□	100	258	258	1.7
AUG 88-25-30- □□	100	258	308	1.9
AUG 88-25-36- □□	100	258	368	2.2
AUG 88-25-43- □□	100	258	438	2.5
AUG 88-30-16- □□	100	308	168	1.4
AUG 88-30-20- □□	100	308	208	1.6
AUG 88-30-25- □□	100	308	258	1.9

Product no.	H	W	D	Weight (kg)
AUG 88-30-30- □□	100	308	308	2.1
AUG 88-30-36- □□	100	308	368	2.4
AUG 88-30-43- □□	100	308	438	2.8
AUG 88-30-50- □□	100	308	508	3.1
NEW AUG 88-36-16- □□	100	368	168	1.6
AUG 88-36-20- □□	100	368	208	1.8
AUG 88-36-25- □□	100	368	258	2.1
AUG 88-36-30- □□	100	368	308	2.4
AUG 88-36-36- □□	100	368	368	2.7
AUG 88-36-43- □□	100	368	438	3.2
AUG 88-36-50- □□	100	368	508	3.5
NEW AUG 88-43-16- □□	100	438	168	1.9
AUG 88-43-20- □□	100	438	208	2.1
AUG 88-43-25- □□	100	438	258	2.4
AUG 88-43-30- □□	100	438	308	2.8
AUG 88-43-36- □□	100	438	368	3.1
AUG 88-43-43- □□	100	438	438	3.6
AUG 88-43-50- □□	100	438	508	4.0
AUG 88-50-30- □□	100	508	308	3.1
AUG 88-50-36- □□	100	508	368	3.5
AUG 88-50-43- □□	100	508	438	4
AUG 88-50-50- □□	100	508	508	4.5
AUG133-16-16- □□	144.5	168	168	1.2
AUG133-16-20- □□	144.5	168	208	1.4
AUG133-16-25- □□	144.5	168	258	1.6
AUG133-16-30- □□	144.5	168	308	1.8
NEW AUG133-16-36- □□	144.5	168	368	2.1
NEW AUG133-16-43- □□	144.5	168	438	2.4
AUG133-20-16- □□	144.5	208	168	1.4
AUG133-20-20- □□	144.5	208	208	1.6
AUG133-20-25- □□	144.5	208	258	1.8
AUG133-20-30- □□	144.5	208	308	2.0
AUG133-20-36- □□	144.5	208	368	2.3
AUG133-20-43- □□	144.5	208	438	2.7
AUG133-25-16- □□	144.5	258	168	1.5
AUG133-25-20- □□	144.5	258	208	1.8
AUG133-25-25- □□	144.5	258	258	2.0
AUG133-25-30- □□	144.5	258	308	2.3
AUG133-25-36- □□	144.5	258	368	2.6
AUG133-25-43- □□	144.5	258	438	3.0
AUG133-30-16- □□	144.5	308	168	1.7
AUG133-30-20- □□	144.5	308	208	2.0
AUG133-30-25- □□	144.5	308	258	2.2
AUG133-30-30- □□	144.5	308	308	2.5
AUG133-30-36- □□	144.5	308	368	2.9
AUG133-30-43- □□	144.5	308	438	3.3
AUG133-30-50- □□	144.5	308	508	3.7
NEW AUG133-36-16- □□	144.5	368	168	1.9
AUG133-36-20- □□	144.5	368	208	2.2
AUG133-36-25- □□	144.5	368	258	2.5
AUG133-36-30- □□	144.5	368	308	2.8
AUG133-36-36- □□	144.5	368	368	3.2
AUG133-36-43- □□	144.5	368	438	3.7
AUG133-36-50- □□	144.5	368	508	4.2
NEW AUG133-43-16- □□	144.5	438	168	2.2
AUG133-43-20- □□	144.5	438	208	2.5
AUG133-43-25- □□	144.5	438	258	2.9
AUG133-43-30- □□	144.5	438	308	3.2
AUG133-43-36- □□	144.5	438	368	3.6
AUG133-43-43- □□	144.5	438	438	4.2
AUG133-43-50- □□	144.5	438	508	4.7
AUG133-50-30- □□	144.5	508	308	3.6
AUG133-50-36- □□	144.5	508	368	4.0
AUG133-50-43- □□	144.5	508	438	4.6
AUG133-50-50- □□	144.5	508	508	5.2

AUPE series EMC SHIELDED ENCLOSURE with DETACHABLE PANELS

NEW SIZE

EMC Shielding Effects

- Elegantly designed EMC shielded aluminium enclosure with detachable front/rear panels.
- Suitable to be used as an easy maintenance desktop case due to its detachable front/rear panels.
  Captive screws allow for ease of maintenance as there is little risk of the screws dropping out and getting lost.
- A large selection of 129 different sizes to choose from.

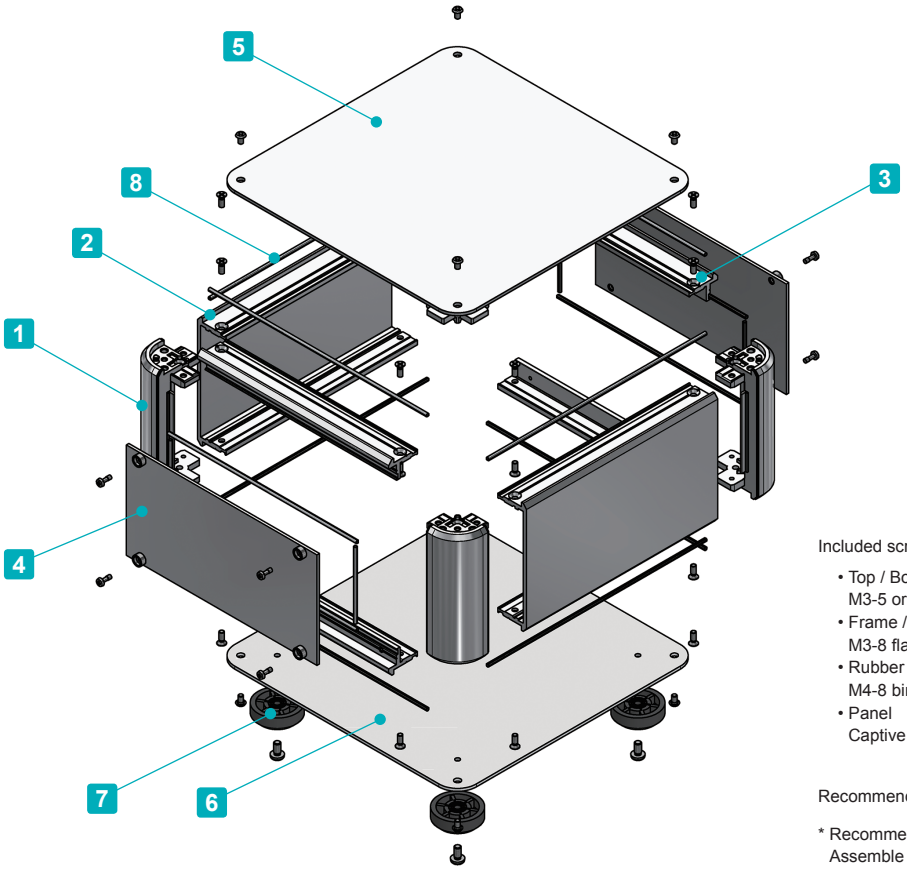

Included screws

- Top / Bottom cover
  M3-5 original trapezoid head (plus / hex) & Nickel plated x 8~16 pcs
- Frame / Panel support frame
  M3-8 flat head & Nickel plated x 16 pcs
- Rubber feet / Aluminium feet
  M4-8 bind head & Black trivalent chromate x 4 pcs
- Panel
  Captive M2.5-7 pan head & Nickel plated x 8 ~ 12 pcs

Recommended torque : { M2.5 - 0.15 ~ 0.2N • m
M3 / M4 - 0.3 ~ 0.6N • m

* Recommended torque listed is for reference only; actual may differ.
Assemble after testing torque.

Components

No.	Part name	Pcs	Material	Color / Finish
1	Corner block	4	Diecast aluminium ADC12	Silver • Black / Painted (Unfinished inside)
2	Frame	2	Extruded aluminium A6063S-T5	Silver / Painted (Unfinished inside)
3	Panel support frame	4	Extruded aluminium A6063S-T5	Silver / Painted (Unfinished inside)
4	Panel	2	Aluminium A1100P	Silver / Painted (Conductive inside)
5	Top cover	1	Aluminium A1100P	Silver / Painted (Conductive inside)
6	Bottom cover	1	Aluminium A1100P	Silver / Painted (Conductive inside)
7	Rubber feet : Aluminium feet	4	TPE (Elastomer) : Aluminium	Black : Silver / Anodized
8	EMC shielding gasket	16	Conductive fiber UL94V-0	Metallic gray

AUPE dimensions

■ DXF/DWG/PDF/STP drawings available on our website.

■ Feet is selectable between rubber or aluminium type.
※Rubber and aluminium feet height are different.

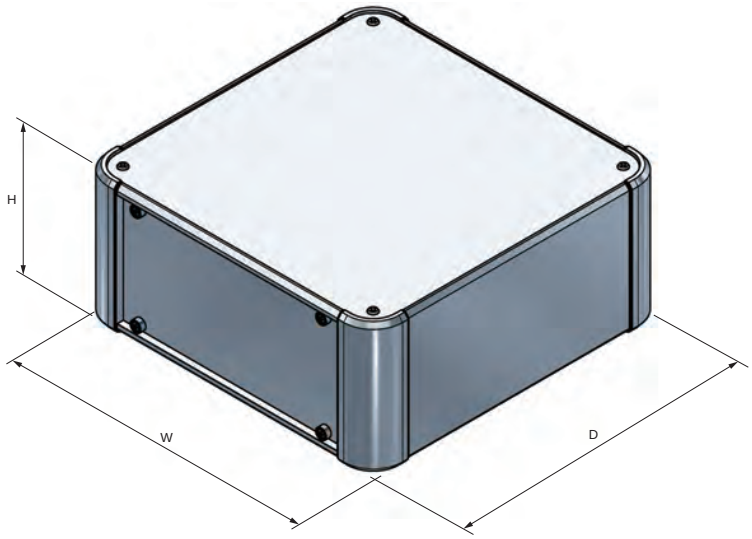

Rubber Feet

Aluminium Feet

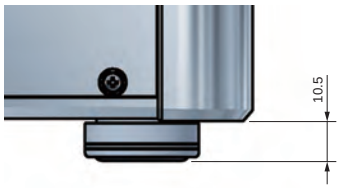

■ Install the EMC shielding gasket into the grooves on the frame, panel support frame, and corner block.

Frame

Panel support frame

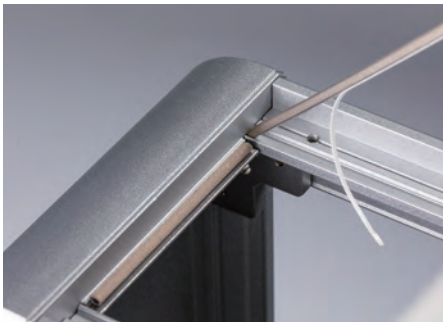

Corner block

Accessories (Optional parts)

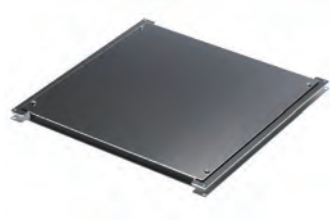

Mounting plate AUC series
See page 179 ~ 180

Elastomer carrying handle FM200
See website

Tilt leg TLW series
See page 222

EMC shielding fan filter EMF series
See website

To select Feet/Screw/Color types, follow steps 1 ~ 3 below.

1 Feet Type

R Rubber (Black / Unfinished)

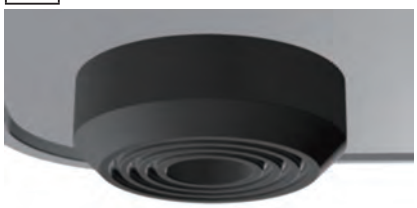

A Aluminium (Silver / Anodized)

2 Screw Type

P Plus (Silver / Nickel plated)

H Hex (Silver / Nickel plated)

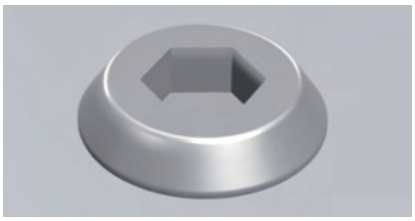

Hex wrench included.

3 Color Type

Please choose from the color combinations listed below.

S S

S B

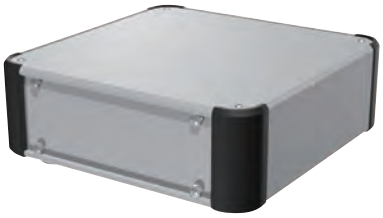

To determine a product number, suffix Feet/Screw/Color code at the end of product number.

Product Number

AUPE □ - □ - □ □ □ - □ □

H-W-D dimensions	1 Feet	2 Screw	3 Color
See page 162 for dimensions / product no.	R or A	P or H	SS • SB

Numbering example :
If looking at "H133 x W300 x D200mm, Feet type A, Screw type H, Color type SS"

➡ **AUPE 133-30-20 AH-SS**

Product no. / Details

■ Please suffix feet, screw, and color type at the end of the product number

Product no.	H	W	D	Weight (kg)
AUPE 66-16-16□□-□□	66	160	160	0.9
AUPE 66-16-20□□-□□	66	160	200	1.0
AUPE 66-16-25□□-□□	66	160	250	1.2
AUPE 66-16-30□□-□□	66	160	300	1.4
NEW AUPE 66-16-36□□-□□	66	160	360	1.5
NEW AUPE 66-16-43□□-□□	66	160	430	1.8
AUPE 66-20-16□□-□□	66	200	160	1.0
AUPE 66-20-20□□-□□	66	200	200	1.2
AUPE 66-20-25□□-□□	66	200	250	1.4
AUPE 66-20-30□□-□□	66	200	300	1.5
AUPE 66-20-36□□-□□	66	200	360	1.8
AUPE 66-20-43□□-□□	66	200	430	2.0
AUPE 66-25-16□□-□□	66	250	160	1.2
AUPE 66-25-20□□-□□	66	250	200	1.4
AUPE 66-25-25□□-□□	66	250	250	1.6
AUPE 66-25-30□□-□□	66	250	300	1.8
AUPE 66-25-36□□-□□	66	250	360	2.0
AUPE 66-25-43□□-□□	66	250	430	2.3
AUPE 66-30-16□□-□□	66	300	160	1.4
AUPE 66-30-20□□-□□	66	300	200	1.6
AUPE 66-30-25□□-□□	66	300	250	1.8
AUPE 66-30-30□□-□□	66	300	300	2.0
AUPE 66-30-36□□-□□	66	300	360	2.3
AUPE 66-30-43□□-□□	66	300	430	2.6
AUPE 66-30-50□□-□□	66	300	500	3.0
NEW AUPE 66-36-16□□-□□	66	360	160	1.6
AUPE 66-36-20□□-□□	66	360	200	1.8
AUPE 66-36-25□□-□□	66	360	250	2.0
AUPE 66-36-30□□-□□	66	360	300	2.3
AUPE 66-36-36□□-□□	66	360	360	2.6
AUPE 66-36-43□□-□□	66	360	430	3.0
AUPE 66-36-50□□-□□	66	360	500	3.4
NEW AUPE 66-43-16□□-□□	66	430	160	1.8
AUPE 66-43-20□□-□□	66	430	200	2.1
AUPE 66-43-25□□-□□	66	430	250	2.4
AUPE 66-43-30□□-□□	66	430	300	2.7
AUPE 66-43-36□□-□□	66	430	360	3.0
AUPE 66-43-43□□-□□	66	430	430	3.4
AUPE 66-43-50□□-□□	66	430	500	3.9
AUPE 66-50-30□□-□□	66	500	300	3.0
AUPE 66-50-36□□-□□	66	500	360	3.4
AUPE 66-50-43□□-□□	66	500	430	3.9
AUPE 66-50-50□□-□□	66	500	500	4.3
AUPE 88-16-16□□-□□	88	160	160	1.0
AUPE 88-16-20□□-□□	88	160	200	1.2
AUPE 88-16-25□□-□□	88	160	250	1.3
AUPE 88-16-30□□-□□	88	160	300	1.5
NEW AUPE 88-16-36□□-□□	88	160	360	1.7
NEW AUPE 88-16-43□□-□□	88	160	430	2.0
AUPE 88-20-16□□-□□	88	200	160	1.2
AUPE 88-20-20□□-□□	88	200	200	1.3
AUPE 88-20-25□□-□□	88	200	250	1.5
AUPE 88-20-30□□-□□	88	200	300	1.7
AUPE 88-20-36□□-□□	88	200	360	1.9
AUPE 88-20-43□□-□□	88	200	430	2.2
AUPE 88-25-16□□-□□	88	250	160	1.3
AUPE 88-25-20□□-□□	88	250	200	1.5
AUPE 88-25-25□□-□□	88	250	250	1.7
AUPE 88-25-30□□-□□	88	250	300	1.9
AUPE 88-25-36□□-□□	88	250	360	2.2
AUPE 88-25-43□□-□□	88	250	430	2.5
AUPE 88-30-16□□-□□	88	300	160	1.5
AUPE 88-30-20□□-□□	88	300	200	1.7
AUPE 88-30-25□□-□□	88	300	250	1.9
AUPE 88-30-30□□-□□	88	300	300	2.2

Product no.	H	W	D	Weight (kg)
AUPE 88-30-36□□-□□	88	300	360	2.5
AUPE 88-30-43□□-□□	88	300	430	2.9
AUPE 88-30-50□□-□□	88	300	500	3.2
NEW AUPE 88-36-16□□-□□	88	360	160	1.7
AUPE 88-36-20□□-□□	88	360	200	1.9
AUPE 88-36-25□□-□□	88	360	250	2.2
AUPE 88-36-30□□-□□	88	360	300	2.5
AUPE 88-36-36□□-□□	88	360	360	2.8
AUPE 88-36-43□□-□□	88	360	430	3.2
AUPE 88-36-50□□-□□	88	360	500	3.6
NEW AUPE 88-43-16□□-□□	88	430	160	2.0
AUPE 88-43-20□□-□□	88	430	200	2.2
AUPE 88-43-25□□-□□	88	430	250	2.6
AUPE 88-43-30□□-□□	88	430	300	2.9
AUPE 88-43-36□□-□□	88	430	360	3.3
AUPE 88-43-43□□-□□	88	430	430	3.7
AUPE 88-43-50□□-□□	88	430	500	4.1
AUPE 88-50-30□□-□□	88	500	300	3.2
AUPE 88-50-36□□-□□	88	500	360	3.6
AUPE 88-50-43□□-□□	88	500	430	4.1
AUPE 88-50-50□□-□□	88	500	500	4.6
AUPE133-16-16□□-□□	132.5	160	160	1.3
AUPE133-16-20□□-□□	132.5	160	200	1.4
AUPE133-16-25□□-□□	132.5	160	250	1.7
AUPE133-16-30□□-□□	132.5	160	300	1.9
NEW AUPE133-16-36□□-□□	132.5	160	360	2.1
NEW AUPE133-16-43□□-□□	132.5	160	430	2.5
AUPE133-20-16□□-□□	132.5	200	160	1.4
AUPE133-20-20□□-□□	132.5	200	200	1.6
AUPE133-20-25□□-□□	132.5	200	250	1.9
AUPE133-20-30□□-□□	132.5	200	300	2.1
AUPE133-20-36□□-□□	132.5	200	360	2.4
AUPE133-20-43□□-□□	132.5	200	430	2.7
AUPE133-25-16□□-□□	132.5	250	160	1.6
AUPE133-25-20□□-□□	132.5	250	200	1.8
AUPE133-25-25□□-□□	132.5	250	250	2.1
AUPE133-25-30□□-□□	132.5	250	300	2.4
AUPE133-25-36□□-□□	132.5	250	360	2.7
AUPE133-25-43□□-□□	132.5	250	430	3.1
AUPE133-30-16□□-□□	132.5	300	160	1.8
AUPE133-30-20□□-□□	132.5	300	200	2.1
AUPE133-30-25□□-□□	132.5	300	250	2.3
AUPE133-30-30□□-□□	132.5	300	300	2.6
AUPE133-30-36□□-□□	132.5	300	360	3.0
AUPE133-30-43□□-□□	132.5	300	430	3.4
AUPE133-30-50□□-□□	132.5	300	500	3.8
NEW AUPE133-36-16□□-□□	132.5	360	160	2.1
AUPE133-36-20□□-□□	132.5	360	200	2.3
AUPE133-36-25□□-□□	132.5	360	250	2.6
AUPE133-36-30□□-□□	132.5	360	300	3.0
AUPE133-36-36□□-□□	132.5	360	360	3.4
AUPE133-36-43□□-□□	132.5	360	430	3.8
AUPE133-36-50□□-□□	132.5	360	500	4.3
NEW AUPE133-43-16□□-□□	132.5	430	160	2.4
AUPE133-43-20□□-□□	132.5	430	200	2.7
AUPE133-43-25□□-□□	132.5	430	250	3.0
AUPE133-43-30□□-□□	132.5	430	300	3.4
AUPE133-43-36□□-□□	132.5	430	360	3.8
AUPE133-43-43□□-□□	132.5	430	430	4.3
AUPE133-43-50□□-□□	132.5	430	500	4.8
AUPE133-50-30□□-□□	132.5	500	300	3.8
AUPE133-50-36□□-□□	132.5	500	360	4.2
AUPE133-50-43□□-□□	132.5	500	430	4.8
AUPE133-50-50□□-□□	132.5	500	500	5.4

*Weight listed is calculated based on rubber feet selection.

AUXE series EMC SHIELDED ALUMINIUM CONTROL BOX

NEW SIZE

EMC Shielding Effects

- Round corner designed aluminium enclosure with 4 extruded aluminium frames.
- Shielding gasket allows the enclosure to be EMC shielded.
- A wide selection of 108 different sizes to choose from.
- Feet is selectable between adhesive rubber or aluminium type.

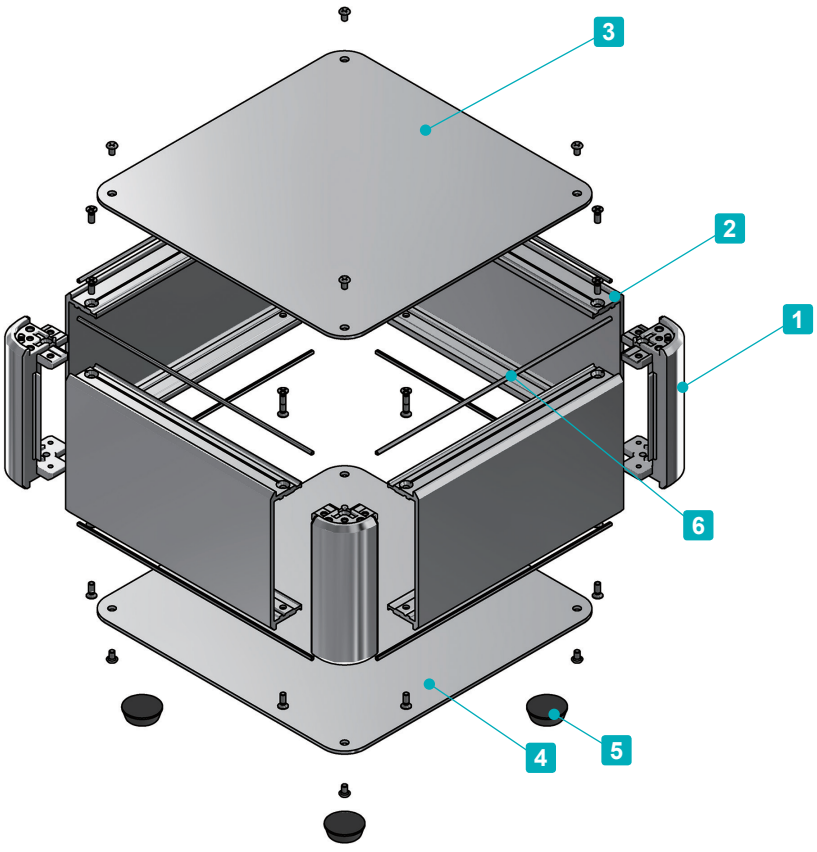

Included screws

- Top / Bottom cover
  M3-5 original trapezoid head (plus / hex) & Nickel plated x 8~16 pcs
- Frame
  M3-8 flat head & Nickel plated x 16 pcs
- Aluminium feet
  M4-8 bind head & Black trivalent chromate x 4 pcs

Recommended torque : 0.3 ~ 0.6N • m
* Recommended torque listed is for reference only; actual may differ.
  Assemble after testing torque.

Components

No.	Part name	Pcs	Material	Color / Finish
1	Corner block	4	Diecast aluminium ADC12	Silver • Black / Painted (Unfinished inside)
2	Frame	4	Extruded aluminium A6063S-T5	Silver / Painted (Unfinished inside)
3	Top cover	1	Aluminium A1100P	Silver / Painted (Conductive inside)
4	Bottom cover	1	Aluminium A1100P	Silver / Painted (Conductive inside)
5	Adhesive Rubber feet : Aluminium feet	4	Synthetic rubber : Aluminium	Black : Silver / Anodized
6	EMC shielding gasket	8	Conductive fiber UL94V-0	Metallic gray

AUXE dimensions

■ DXF/DWG/PDF/STP drawings available on our website.

■ Feet is selectable between rubber or aluminium type.
※Rubber and aluminium feet height are different.

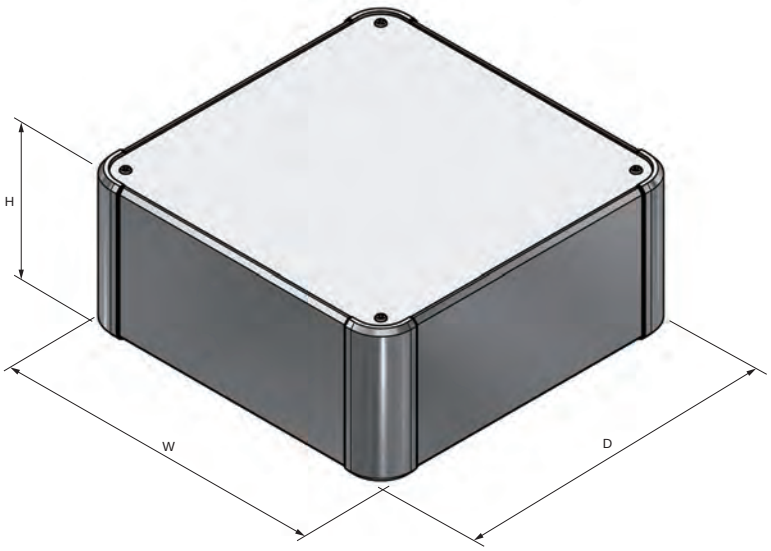

Rubber Feet

Aluminium Feet

■ Install the EMC shielding gasket into the grooves on the frame and corner block.

Accessories (Optional parts)

Wall mount support arm MAR series
See page 181 ~ 182

Mounting plate AUC series
See page 179 ~ 180

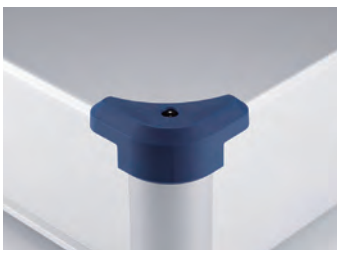

Corner guard AUCG series
See page 180

Elastomer carrying handle FM200
See website

Aluminium handle OH series
See website

To select Feet/Screw/Color types, follow steps 1 ~ 3 below.

1 Feet Type

R Adhesive Rubber (Black / Unfinished)

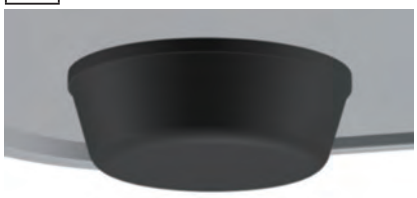

A Aluminium (Silver / Anodized)

2 Screw Type

P Plus (Silver / Nickel plated)

H Hex (Silver / Nickel plated)

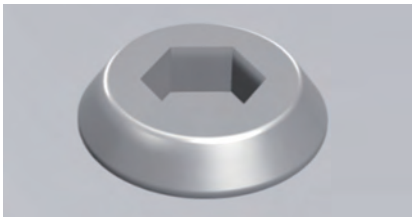

Hex wrench included.

3 Color Type

Please choose from the color combinations listed below.

S S

S B

To determine a product number, suffix Feet/Screw/Color code at the end of product number.

Product Number

AUXE □ - □ - □ □ □ - □ □

H-W-D dimensions	1 Feet	2 Screw	3 Color
See page 170 for dimensions / product no.	R or A	P or H	SS • SB

Numbering example :
If looking at "H133 x W300 x D300mm, Feet type R, Screw type P, Color type SB"

➡ **AUXE 133-30-30 RP-SB**

Product no. / Details

■ Please suffix feet, screw, and color type at the end of the product number

Product no.	H	W	D	Weight (kg)
NEW AUXE 44-16-16□□-□□	44	160	160	0.7
NEW AUXE 44-20-16□□-□□	44	200	160	0.8
NEW AUXE 44-20-20□□-□□	44	200	200	0.9
NEW AUXE 44-25-16□□-□□	44	250	160	1.0
NEW AUXE 44-25-20□□-□□	44	250	200	1.1
NEW AUXE 44-25-25□□-□□	44	250	250	1.3
NEW AUXE 44-30-16□□-□□	44	300	160	1.1
NEW AUXE 44-30-20□□-□□	44	300	200	1.3
NEW AUXE 44-30-25□□-□□	44	300	250	1.5
NEW AUXE 44-30-30□□-□□	44	300	300	1.7
NEW AUXE 44-36-16□□-□□	44	360	160	1.2
NEW AUXE 44-36-20□□-□□	44	360	200	1.5
NEW AUXE 44-36-25□□-□□	44	360	250	1.7
NEW AUXE 44-36-30□□-□□	44	360	300	2.0
NEW AUXE 44-36-36□□-□□	44	360	360	2.3
NEW AUXE 44-43-16□□-□□	44	430	160	1.5
NEW AUXE 44-43-20□□-□□	44	430	200	1.7
NEW AUXE 44-43-25□□-□□	44	430	250	2.0
NEW AUXE 44-43-30□□-□□	44	430	300	2.3
NEW AUXE 44-43-36□□-□□	44	430	360	2.6
NEW AUXE 44-43-43□□-□□	44	430	430	3.0
NEW AUXE 44-50-30□□-□□	44	500	300	2.6
NEW AUXE 44-50-36□□-□□	44	500	360	3.0
NEW AUXE 44-50-43□□-□□	44	500	430	3.4
NEW AUXE 44-50-50□□-□□	44	500	500	3.9
NEW AUXE 44-60-36□□-□□	44	600	360	3.5
NEW AUXE 44-60-43□□-□□	44	600	430	4.0
AUXE 66-16-16□□-□□	66	160	160	0.9
AUXE 66-20-16□□-□□	66	200	160	1.0
AUXE 66-20-20□□-□□	66	200	200	1.1
AUXE 66-25-16□□-□□	66	250	160	1.2
AUXE 66-25-20□□-□□	66	250	200	1.3
AUXE 66-25-25□□-□□	66	250	250	1.5
AUXE 66-30-16□□-□□	66	300	160	1.3
AUXE 66-30-20□□-□□	66	300	200	1.5
AUXE 66-30-25□□-□□	66	300	250	1.7
AUXE 66-30-30□□-□□	66	300	300	2.0
NEW AUXE 66-36-16□□-□□	66	360	160	1.4
AUXE 66-36-20□□-□□	66	360	200	1.7
AUXE 66-36-25□□-□□	66	360	250	2.0
AUXE 66-36-30□□-□□	66	360	300	2.2
AUXE 66-36-36□□-□□	66	360	360	2.6
NEW AUXE 66-43-16□□-□□	66	430	160	1.8
AUXE 66-43-20□□-□□	66	430	200	2.0
AUXE 66-43-25□□-□□	66	430	250	2.3
AUXE 66-43-30□□-□□	66	430	300	2.6
AUXE 66-43-36□□-□□	66	430	360	3.0
AUXE 66-43-43□□-□□	66	430	430	3.4
AUXE 66-50-30□□-□□	66	500	300	2.9
AUXE 66-50-36□□-□□	66	500	360	3.3
AUXE 66-50-43□□-□□	66	500	430	3.8
AUXE 66-50-50□□-□□	66	500	500	4.3
AUXE 66-60-36□□-□□	66	600	360	3.8
AUXE 66-60-43□□-□□	66	600	430	4.4

Product no.	H	W	D	Weight (kg)
AUXE 88-16-16□□-□□	88	160	160	1.0
AUXE 88-20-16□□-□□	88	200	160	1.1
AUXE 88-20-20□□-□□	88	200	200	1.3
AUXE 88-25-16□□-□□	88	250	160	1.3
AUXE 88-25-20□□-□□	88	250	200	1.5
AUXE 88-25-25□□-□□	88	250	250	1.7
AUXE 88-30-16□□-□□	88	300	160	1.5
AUXE 88-30-20□□-□□	88	300	200	1.7
AUXE 88-30-25□□-□□	88	300	250	1.9
AUXE 88-30-30□□-□□	88	300	300	2.2
NEW AUXE 88-36-16□□-□□	88	360	160	1.6
AUXE 88-36-20□□-□□	88	360	200	1.9
AUXE 88-36-25□□-□□	88	360	250	2.2
AUXE 88-36-30□□-□□	88	360	300	2.4
AUXE 88-36-36□□-□□	88	360	360	2.8
NEW AUXE 88-43-16□□-□□	88	430	160	1.9
AUXE 88-43-20□□-□□	88	430	200	2.2
AUXE 88-43-25□□-□□	88	430	250	2.5
AUXE 88-43-30□□-□□	88	430	300	2.8
AUXE 88-43-36□□-□□	88	430	360	3.2
AUXE 88-43-43□□-□□	88	430	430	3.6
AUXE 88-50-30□□-□□	88	500	300	3.2
AUXE 88-50-36□□-□□	88	500	360	3.6
AUXE 88-50-43□□-□□	88	500	430	4.1
AUXE 88-50-50□□-□□	88	500	500	4.6
AUXE 88-60-36□□-□□	88	600	360	4.1
AUXE 88-60-43□□-□□	88	600	430	4.7
AUXE133-16-16□□-□□	132.5	160	160	1.3
AUXE133-20-16□□-□□	132.5	200	160	1.5
AUXE133-20-20□□-□□	132.5	200	200	1.7
AUXE133-25-16□□-□□	132.5	250	160	1.7
AUXE133-25-20□□-□□	132.5	250	200	1.9
AUXE133-25-25□□-□□	132.5	250	250	2.2
AUXE133-30-16□□-□□	132.5	300	160	1.9
AUXE133-30-20□□-□□	132.5	300	200	2.1
AUXE133-30-25□□-□□	132.5	300	250	2.4
AUXE133-30-30□□-□□	132.5	300	300	2.7
NEW AUXE133-36-16□□-□□	132.5	360	160	2.2
AUXE133-36-20□□-□□	132.5	360	200	2.4
AUXE133-36-25□□-□□	132.5	360	250	2.7
AUXE133-36-30□□-□□	132.5	360	300	3.1
AUXE133-36-36□□-□□	132.5	360	360	3.4
NEW AUXE133-43-16□□-□□	132.5	430	160	2.5
AUXE133-43-20□□-□□	132.5	430	200	2.8
AUXE133-43-25□□-□□	132.5	430	250	3.1
AUXE133-43-30□□-□□	132.5	430	300	3.5
AUXE133-43-36□□-□□	132.5	430	360	3.9
AUXE133-43-43□□-□□	132.5	430	430	4.4
AUXE133-50-30□□-□□	132.5	500	300	3.9
AUXE133-50-36□□-□□	132.5	500	360	4.4
AUXE133-50-43□□-□□	132.5	500	430	4.9
AUXE133-50-50□□-□□	132.5	500	500	5.5
AUXE133-60-36□□-□□	132.5	600	360	5.0
AUXE133-60-43□□-□□	132.5	600	430	5.7

*Weight listed is calculated based on rubber feet selection.

AUC series MOUNTING PLATE for AU□ series

NEW SIZE

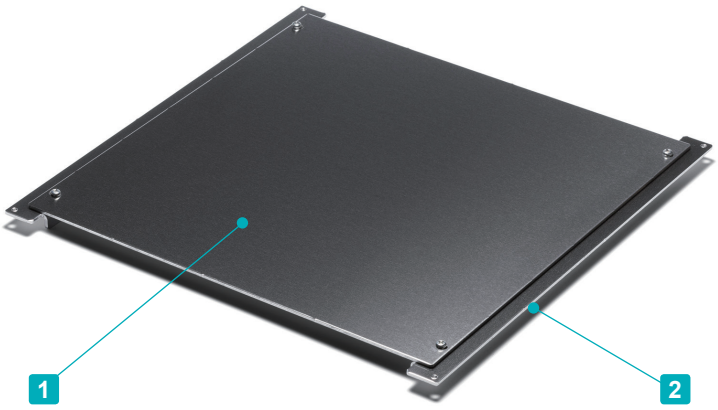

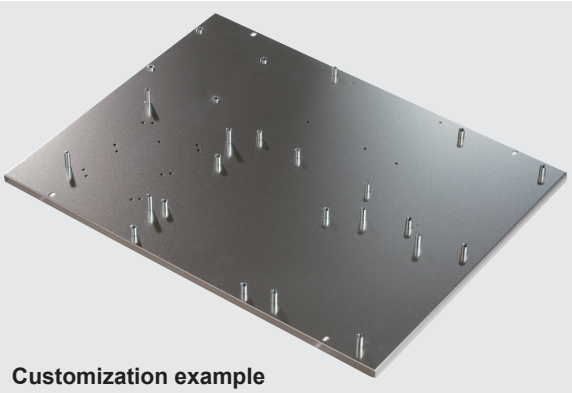

Customization example

■ See page CUSTOM-9 ~ CUSTOM-11 and our website for further details.

■ Mounting plate for AU, AUP, AUPE, AUX, AUXE, AUG, AUGE and AUGH series.

Components

No.	Part name	Pcs	Material	Finish
1	Mounting plate	1	Aluminium A1050P t=2.0	Unfinished
2	L-bracket	2	Aluminium A1050P t=2.0	Unfinished

Included screw :
- Corner block M3 flat head : Nickel plated x 4
- Mounting plate M3-5 pan head : Trivalent chromate x 4

AUC dimensions

■ DXF/DWG/PDF drawings available on our website.

Non-reinforced (N) type

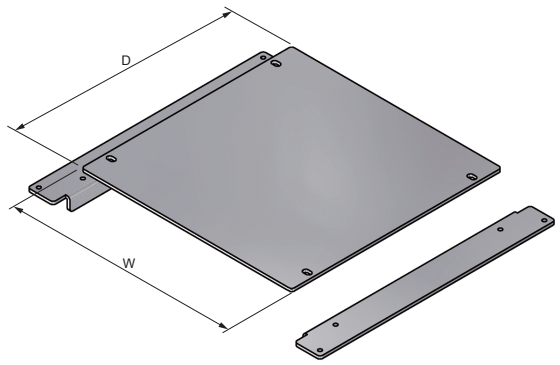

Reinforced (Y) type

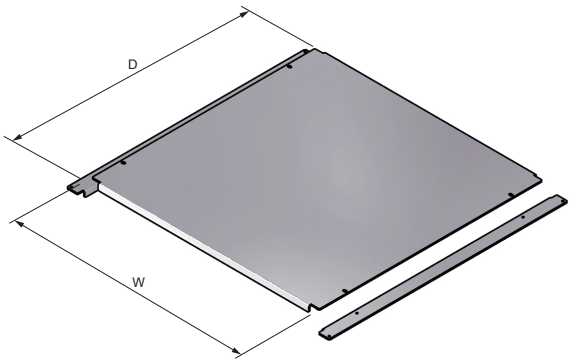

Product no. / Details

Product no.	W	D	Enclosure W x D	Reinforcement	Weight (g)
AUC16-16	108	108	160×160	N	102
AUC16-20	108	148	160×200	N	138
AUC16-25	108	198	160×250	N	181
AUC16-30	108	248	160×300	N	226
NEW AUC16-36	108	308	160×360	N	279
NEW AUC16-43	108	378	160×430	N	340
AUC20-16	148	108	200×160	N	126
AUC20-20	148	148	200×200	N	170
AUC20-25	148	198	200×250	N	224
AUC20-30	148	248	200×300	N	279
AUC20-36	148	308	200×360	N	345
AUC20-43	148	378	200×430	N	422
AUC25-16	198	108	250×160	N	155
AUC25-20	198	148	250×200	N	210
AUC25-25	198	198	250×250	N	278
AUC25-30	198	248	250×300	N	346
AUC25-36	198	308	250×360	N	428
AUC25-43	198	378	250×430	N	524
AUC30-16	248	108	300×160	N	184
AUC30-20	248	148	300×200	N	249
AUC30-25	248	198	300×250	N	331
AUC30-30	248	248	300×300	N	413

Product no.	W	D	Enclosure W x D	Reinforcement	Weight (g)
AUC30-36	248	308	300×360	N	512
AUC30-43	248	378	300×430	N	626
AUC30-50	248	448	300×500	N	741
NEW AUC36-16	308	108	360×160	N	219
AUC36-20	308	148	360×200	N	297
AUC36-25	308	198	360×250	N	395
AUC36-30	308	248	360×300	N	494
AUC36-36	308	308	360×360	N	581
AUC36-43	308	378	360×430	N	749
AUC36-50	308	448	360×500	N	886
NEW AUC43-16	378	108	430×160	Y	287
AUC43-20	378	148	430×200	Y	353
AUC43-25	378	198	430×250	Y	470
AUC43-30	378	248	430×300	Y	587
AUC43-36	378	308	430×360	Y	728
AUC43-43	378	378	430×430	Y	918
AUC43-50	378	448	430×500	Y	1,082
AUC50-30	448	248	500×300	Y	681
AUC50-36	448	308	500×360	Y	814
AUC50-43	448	378	500×430	Y	1,061
AUC50-50	448	448	500×500	Y	1,257
AUC60-36	548	308	600×360	Y	1,021
AUC60-43	548	378	600×430	Y	1,279

How to install AUC mounting plate

1. Install L-bracket onto countersunk screw hole on corner block.

2. Install mounting plate onto L-bracket with screws.

AUCG series CORNER GUARD for AU□ series NEW

AUCG dimensions

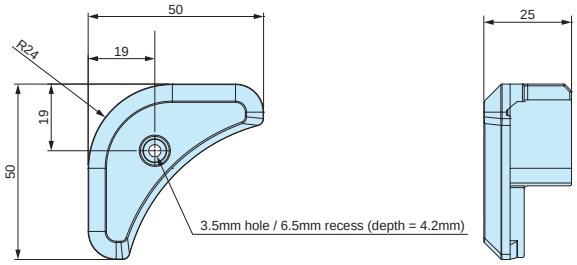

■ DXF/DWG/PDF drawings available on our website.

■ Spare corner guard for AUG and AUGE series. AUCG corner guard can also be installed on AU, AUP, AUPE, AUX, and AUXE series enclosures.

■ 4 colors available: Black, Gray, Navy, and Red. Retailed as a pack of 8pcs.

Product no.

Product no.				Weight (g)	Pack of
● Black	● Gray	● Navy	● Red		
AUCG-1B	AUCG-1G	AUCG-1N	AUCG-1R	9.5	8

AEG series EMC SHIELDING GASKET for AU□ series NEW

EMC Shielding Effects

■ Spare EMC shielding gasket for AUPE, AUXE, and AUGE series enclosures. Installation on AUP series is possible to allow it to be EMC shielded.

Cross section view

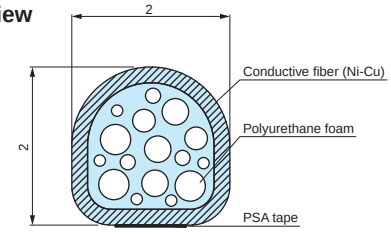

Product no.

Product no.	Material	Color	Sales unit
AEG-1000	Conductive fiber UL94V-0	Metallic gray	1000mm x 1 pc

MAR series WALL MOUNT SUPPORT ARM

NEW

- Wall mount support arm move easily to the preferred positions.
- Suitable for command panel on machinery and touch panel controller. Easy installation onto the wall as well.
- Hole pitch on the monitor bracket is compatible with VESA mount standards. Possible to mount PC display without modification.

MAR specifications

MAR-312W

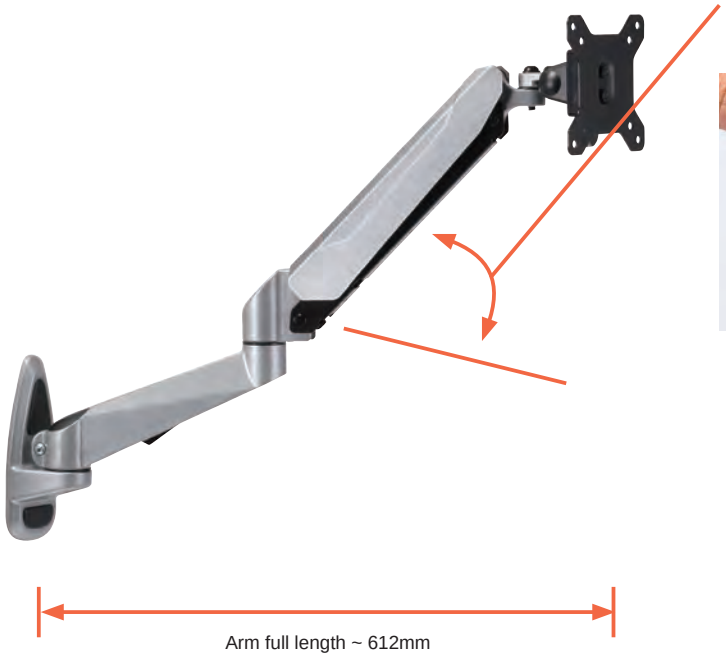

Adjustable bolt for up/down direction on arm is firmly set initially.
Adjust the movement according to the installed device.

Pan-Tilt bracket dimensions

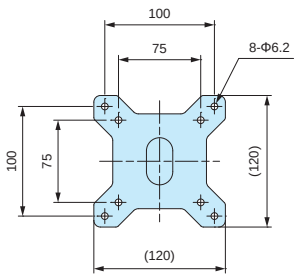

Wall mounting bracket dimensions

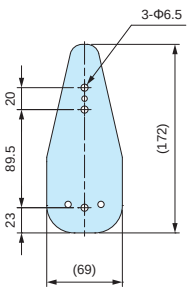

Max load : 6.5kg (including product weight, adjustable bolt firmly locked)
Material : Steel • Plastic • Aluminium diecast
*Wall mounting screws included.

MAR-111W

Pan-Tilt bracket angle can be adjusted by loosening the bolt after replacing the cover.

Pan-Tilt bracket dimensions

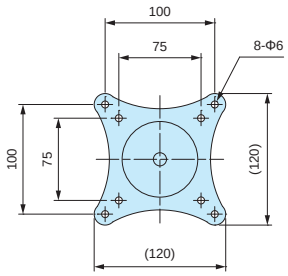

Wall mounting bracket dimensions

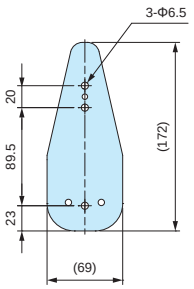

Max load : 8kg (including product weight)
Material : Steel • Plastic • Aluminium diecast
*Wall mounting screws included.

MAR-110W

*Pan-Tilt bracket do not move up/down direction.

Pan-Tilt bracket dimensions

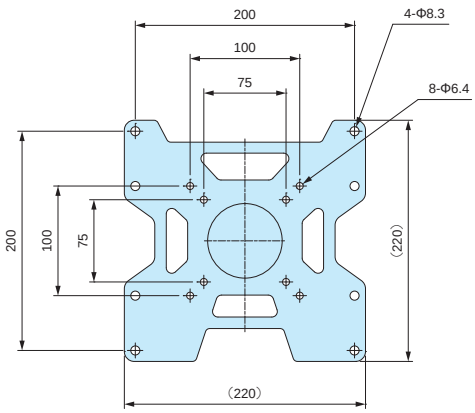

Wall mounting bracket dimensions

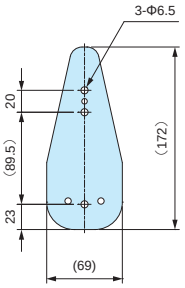

Max load : 8kg (including product weight)
Material : Steel • Plastic • Aluminium diecast
*Wall mounting screws included.

Product no. / Dimensions

Product no.	Arm full length	Arm color	Weight (kg)
MAR-312W	~ 612mm	Metallic gray	2.2
MAR-111W	~ 340mm	White / Black	1.0
MAR-110W	~ 130mm	White / Black	1.0