LINE-UP

FK series Clinching Standoff (Through type)

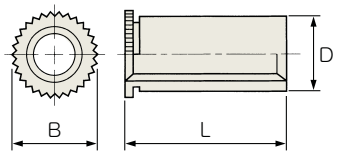

All dimensions are in mm

Part #	Thread Code	Thread Pitch	D -0.08	B ±0.2	L ±0.2	min. sheet thickness	hole size In sheet	min. dist. hole Φ to edge
FK-M2-6	M2	0.4	4.18	5.2	6	t1.0	4.2 +0.08 -0	6.0
FK-M2-8					8			
FK-M2-10					10			
FK-M2-12					12			
FK-M2.5-6	M2.5	0.45			6			
FK-M2.5-8					8			
FK-M2.5-10					10			
FK-M2.5-12					12			
FK-M3-3	M3	0.5	6.18	7.2	3		6.2 +0.08 -0	7.0
FK-M3-4					4			
FK-M3-5					5			
FK-M3-6					6			
FK-M3-7					7			
FK-M3-8					8			
FK-M3-9					9			
FK-M3-10					10			
FK-M3-11					11			
FK-M3-12					12			
FK-M3-13					13			
FK-M3-14					14			
FK-M3-15					15			
FK-M3-16					16			
FK-M3-17					17			
FK-M3-18					18			
FK-M3-20					20			
FK-M4-6	M4	0.7	7.18	8.2	6		7.2 +0.08 -0	8.0
FK-M4-7					7			
FK-M4-8					8			
FK-M4-9					9			
FK-M4-10					10			
FK-M5-6	M5	0.8			6			
FK-M5-8					8			
FK-M5-10					10			
FK-M5-12					12			

FKB series Clinching Standoff (Blind type)

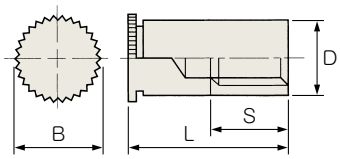

All dimensions are in mm

Part #	Thread Code	Thread Pitch	D -0.08	B ±0.2	L ±0.2	S ±0.2	min. sheet thickness	hole size In sheet	min. dist. hole Φ to edge
FKB-M2-6	M2	0.4	4.18	5.2	6	3	t1.0	4.2 +0.08 -0	6.0
FKB-M2-8					8	4			
FKB-M2-10					10	5			
FKB-M2-12					12	6			
FKB-M2.5-6	M2.5	0.45			6	3			
FKB-M2.5-8					8	4			
FKB-M2.5-10					10	5			
FKB-M2.5-12					12	6			
FKB-M3-6	M3	0.5	6.18	7.2	6	3		6.2 +0.08 -0	7.0
FKB-M3-7					7	4			
FKB-M3-8					8	5			
FKB-M3-9					9	6			
FKB-M3-10					10	6			
FKB-M3-12					12	8			
FKB-M3-14					14	8			
FKB-M3-16					16	8			
FKB-M4-6	M4	0.7	7.18	8.2	6	3		7.2 +0.08 -0	8.0
FKB-M4-8					8	5			
FKB-M4-10					10	6			
FKB-M4-12					12	8			
FKB-M4-14					14	8			
FKB-M4-16					16	8			
FKB-M5-8	M5	0.8			8	5			
FKB-M5-10					10	6			
FKB-M5-12					12	8			

Material & Finish

Series	Material	Finish
FK/FKB - Standoff	Steel	Trivalent Chromate
CT - Stud		
EK/RK - Nut		
SR - Floating Nut		
BRK - Blind Nut		

CT series Clinching Stud

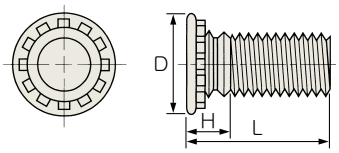

All dimensions are in mm

Part #	Thread Code	Thread Pitch	D ±0.4	H max.	L ±0.4	min. sheet thickness	hole size In sheet +0.008 -0	min. dist. hole Φ to edge
CT-M3-10	M3	0.5	4.6	2.1	10	1.0	3.0	5.6
CT-M3-12					12			
CT-M3-15					15			
CT-M4-10	M4	0.7	5.9	2.4	10		4.0	7.2
CT-M4-12					12			
CT-M4-15					15			

EK series Clinching Nut (Hexagon)

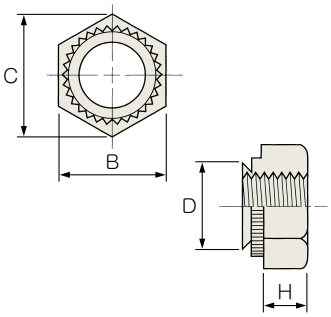

All dimensions are in mm

Part #	Thread Code	Thread Pitch	D max.	B -0.2	C approx.	H ±0.1	min. sheet thickness	hole size In sheet +0.008 -0	min. dist. hole Φ to edge
EK-M2-1	M2	0.4	4.45	5.5	6.4	2.0	t1.0	4.5	4.5
EK-M2.5-1	M2.5	0.45							
EK-M3-1	M3	0.5							
EK-M3-2							t1.4		
EK-M4-1	M4	0.7	5.45	7.0	8.1	2.2	t1.0	5.5	5.5
EK-M4-2							t1.4		
EK-M5-1	M5	0.8	6.45	8.0	9.2	3.0	t1.0	6.5	6.5
EK-M5-2							t1.4		

RK series Clinching Nut (Round)

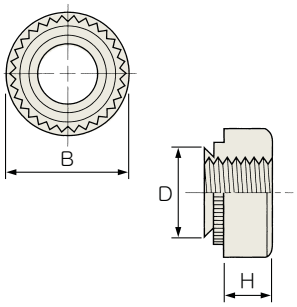

All dimensions are in mm

Part #	Thread Code	Thread Pitch	D max.	B ±0.2	H ±0.1	min. sheet thickness	hole size In sheet +0.008 -0	min. dist. hole Φ to edge
RK-M2-1	M2	0.4	4.22	6.3	1.5	t1.0	4.25	4.8
RK-M2.5-1	M2.5	0.45						
RK-M2.5-2						t1.4		
RK-M3-1	M3	0.5				t1.0		
RK-M3-2						t1.4		
RK-M4-1	M4	0.7	5.38	7.9	2.0	t1.0	5.4	6.9
RK-M4-2						t1.4		
RK-M5-1	M5	0.8	6.38	8.7		t1.0	6.4	7.1
RK-M5-2						t1.4		

SR series Clinching Floating Nut

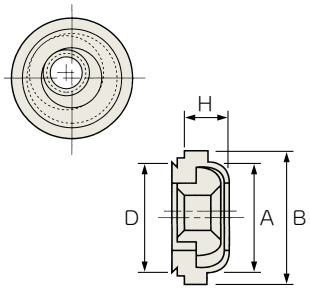

All dimensions are in mm

Part #	Thread Code	Thread Pitch	D max.	B ±0.2	A max.	H max.	min. sheet thickness	hole size In sheet +0.008 -0	min. dist. hole Φ to edge
SR-M3-1	M3	0.5	7.35	9.1	7.4	3.3	t1.0	7.4	7.6
SR-M3-2							t1.4		
SR-M4-1	M4	0.7	9.35	11.2	9.3		t1.0	9.4	8.6
SR-M4-2							t1.4		

BRK series Clinching Blind Nut

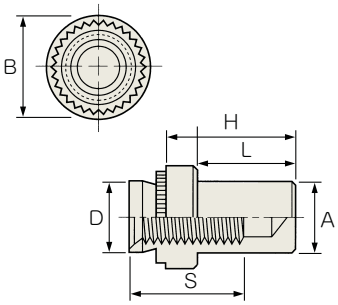

All dimensions are in mm

Part #	Thread Code	Thread Pitch	D max.	A max.	B max.	S min.	H +0.25	min. sheet thickness	hole size In sheet +0.008 -0	min. dist. hole Φ to edge
BRK-M3-1	M3	0.5	4.22	3.8	6.35	5.3	9.6	t1.0	4.25	4.8
BRK-M3-2								t1.4		
BRK-M4-1	M4	0.7	5.38	5.2	7.95	6.8	11.2	t1.0	5.40	6.9
BRK-M4-2								t1.4		